ARPOOL S PROJECTOR
INSTALLATION INSTRUCTIONS (FIXTURE)

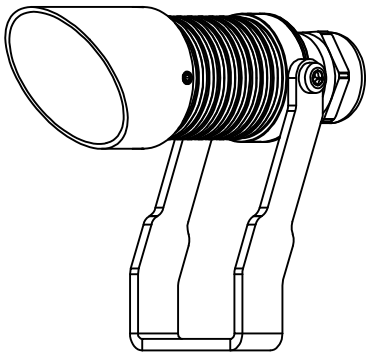

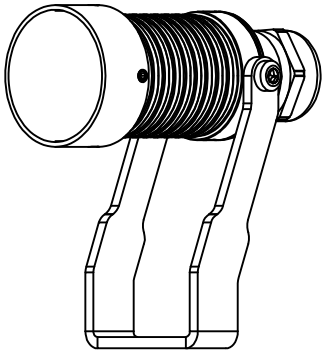

5m MAX.
UNDERWATER

24 VDC | IP68 | AISI316L | Ta I 40°C | IK10 | NO PRESSURE WASH

All dimensions are given according to the SI system of units (mm, kg, °C), additional dimensions that are written in brackets, are given according to the U.S. measurement system (in, lbs, °F)

GENERAL REMARKS ON SAFETY

- READ ALL OF THESE INSTRUCTIONS BEFORE INSTALLING FIXTURES.
- KEEP ALL OF THE INSTRUCTIONS FOR FUTURE REFERENCE.
- INSTALLATION IS TO BE PERFORMED BY A QUALIFIED ELECTRICIAN ONLY.
- ALL INSTALLATIONS ARE TO CONFORM TO THE STANDARDS OF THE NATIONAL ELECTRICAL CODE AS WELL AS ALL LOCAL JURISDICTIONAL CODES AND REGULATIONS.
- PRODUCT MUST BE INSTALLED IN ACCORDANCE WITH THE APPLICABLE INSTALLATION CODE BY A PERSON FAMILIAR WITH THE CONSTRUCTION AND OPERATION OF THE PRODUCT AND THE HAZARDS INVOLVED.
- TURN OFF POWER BEFORE INSTALLING FIXTURE.
- DO NOT OPEN THE LUMINAIRE AS IT WILL ANNUL THE IP RATING OF LUMINAIRE AND VOID THE WARRANTY.
- THE SURFACE TEMPERATURE OF THE FIXTURE IS ≈40°C (104°F) AND IMPOSES NO LIMITS ON INSTALLATION.
- CALCULATE THE MAXIMUM POWER CONSUMPTION AND USE APPROPRIATELY SIZED DRIVERS/CONTROLLERS.
- FIXTURES' SURFACES EXPOSED TO THE EFFECTS OF WATER (INCLUDING WATER CONTAINING CHLORINE) ARE MADE OUT OF AISI316L STAINLESS STEEL. AISI316L IS SUITABLE FOR THIS USE AND WILL PREVENT CORROSION UP TO LEVEL OF 1000 PPM OF CHLORINE IN WATER AND UP TO WATER pH LEVEL OF 7.
- THE EXTERNAL FLEXIBLE CABLE OR CORD OF THIS LUMINAIRE CANNOT BE REPLACED; IF THE CORD IS DAMAGED, THE LUMINAIRE WILL NO LONGER BE USABLE, AND THE LUMINAIRE MUST BE REPLACED.

WARRANTY

ALL PRODUCTS ARE FACTORY TESTED AND ARE GUARANTEED FREE FROM FACTORY DEFECT FOR A PERIOD OF 36 MONTHS UNDER FOLLOWING TERMS:

- PRODUCT HAS NOT BEEN SUBJECT TO INCORRECT VOLTAGE OR POLARITY CONNECTION.
- PRODUCT HAS NOT BEEN SUBJECT TO PHYSICAL OR ATMOSPHERIC DAMAGE.
- PRODUCT HAS BEEN RETURNED AND FACTORY EVALUATED FOR DEFECT OR MALFUNCTION.
- ALL DRIVERS AND CONTROLLERS ARE APPROVED FOR USE BY FILIX.
- THE LUMINAIRE FACTORY SEAL (IP RATING) HAS NOT BEEN COMPROMISED

THE MANUFACTURER ACCEPTS NO RESPONSIBILITY FOR DAMAGE TO PERSONS OR PROPERTY ARISING THROUGH IMPROPER USE OR INSTALLATION.
ANY MODIFICATION OF THE LUMINAIRE WILL VOID ANY AND ALL WRITTEN OR IMPLIED WARRANTIES.

STANDARD REPLACEMENT AND NORMAL SERVICING TERMS.

ALL ELECTRONIC AND OTHER CONSUMABLE COMPONENTS ARE SUBJECT OF EXCHANGE AFTER 36 MONTHS OF OPERATIONS. PRODUCT PERFORMANCE DEPENDS OF CRITICAL ELECTRONIC AND OTHER COMPONENTS WHICH CAN BE SERVICED WITH OFFICIAL DEALER OR DIRECTLY WITH THE MANUFACTURER.
MANUFACTURER HOLDS THE RIGHT TO REPAIR AND CHANGE COMPONENTS AS PER CURRENT COMPONENT AVAILABILITY.
MANUFACTURER CANNOT BE HELD LIABLE FOR COMPONENTS AND OTHER EXPENSES (DE-INSTALLATION, INSTALLATION, SHIPPING, ETC.) INCURRED DURING THE PROCESS OF PRODUCT IMPROVEMENT AND SERVICING.
THE LIGHT SOURCE CONTAINED IN THIS LUMINAIRE SHALL ONLY BE REPLACED BY THE MANUFACTURER OR HIS SERVICE AGENT OR A SIMILAR QUALIFIED PERSON.

WIRING

FILIX
www.filixlighting.com

WIRE MARKINGS

OPTION WITH SINGLE LED COLOR

+ BLACK WIRE
- WHITE WIRE

OPTION WITH RGBW LED COLOR

+ BLACK WIRE
-R RED WIRE
-G GREEN WIRE
-B ORANGE WIRE
-W WHITE WIRE

NOTE:

IT ADVISED THAT CABLE LENGTH IS LONG ENOUGH THAT IT REACHES DRY AREA FOR SPLICE CONNECTION DRY AREA. CONTROL GEAR USED TO POWER THIS LUMINAIRE SHALL BE SELV TYPE; HIGHEST ALLOWED UOUT TO BE MAX 10% OF THE NOMINAL VOLTAGE OF CONTROL GEAR;MAXIMUM ALLOWED WIRING DISTANCE BETWEEN CONTROL GEAR AND LUMINAIRE WITH STANDARD SUPPLIED CABLE IS 9 m OR 30˝. INSTALLATION OF LONGER WIRING LENGTHS SHOULD BE DISCUSSED WITH MANUFACTURER PRIOR THE FIXTURE ORDERING. WHERE LUMINAIRE IS DELIVERED WITH CONNECTING LEADS AND WITHOUT A MEANS OF CONNECTION TO THE POWER SUPPLY TERMINAL BLOCKS MAY BE USED (TERMINAL BLOCKS SUPPLIED BY MANUFACTURER). IF TERMINAL BLOCKS IS LOST IT SHALL BE REPLACED FOR THE SAME IP RATING AS THE LUMINAIRE ITSELF, WITH RATED VOLTAGE OF MIN. 400 V AND RATED CONNECTION CAPACITY OF 10A. CONNECTION WIRE ENDS COMING FROM POWER SUPPLY TO BE PREPARED AS TERMINAL BLOCK MANUFACTURER RECOMMENDS. TERMINAL BLOCK SHOULD BE PLACED IN A LOCATION WHERE IT DOESN'T NOT AFFECT THE LUMINAIRE OPERATION.

FIXTURE DIMENSIONS

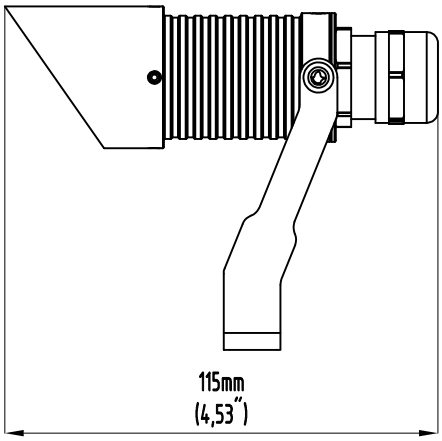

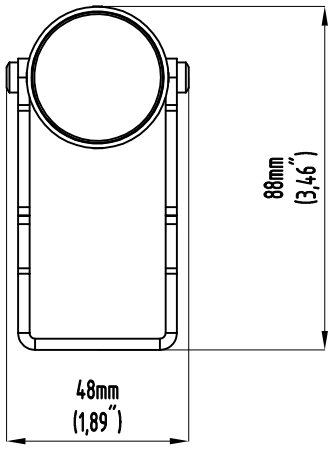

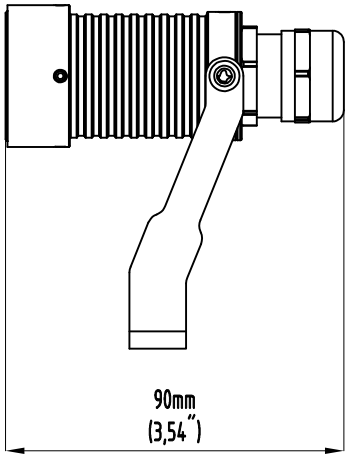

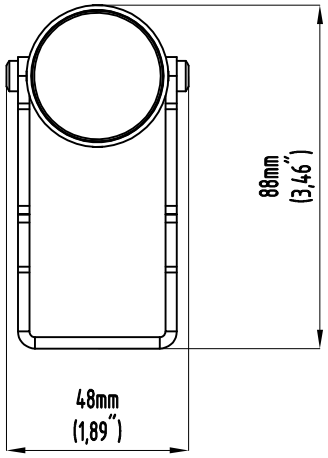

INSTALLATION GUIDE

1. DRILL THE HOLE FOR ANCHOR (USE BRACKET FOR DRILL TEMPLATE)
2. INSERT THE ANCHOR
3. CONNECT THE FIXTURE CABLE WITH SUPPLY CABLE
4. MOUNT THE FIXTURE AND GROUNDING WITH SCREW (GROUNDING WIRE AND SCREW NOT SUPPLIED BY MANUFACTURER)
5. ROTATE FIXTURE TO THE DESIRED POSITION LIKE SHOWN ON "DETAIL A" AND FIX IT WITH ISO14583 M4x6 (A4/MARINE GRADE) SCREWS (SCREWS SUPPLIED BY MANUFACTURER)

DETAIL A

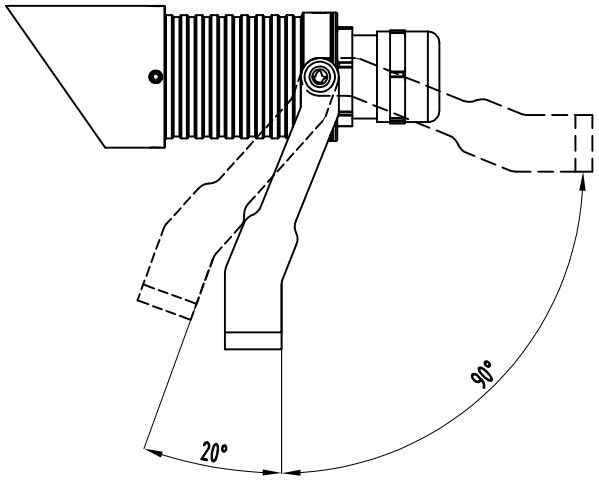

INSTALLATION BRACKET SCREW CLEARANCE

