SERIE 3380 HV

8-33806hv

SERIE 3380 HV RECESSED SPOTLIGHT made of aluminium, black, similar to RAL 9011, light output direct, dimmability: not dimmable, IP20





SKETCH

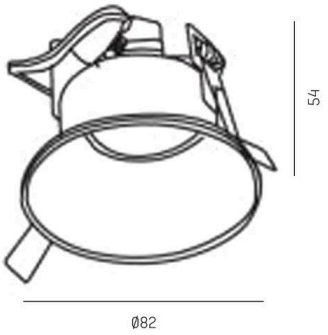

TECHNICAL DETAILS

Light source	QPAR 16 9W
Number of sockets	1x
Socket	GU10
Dimmability	not dimmable
Light emission area	direct
Voltage	220-240V 50/60Hz
Height [mm]	84
Diameter [mm]	81
Ceiling cutout [mm]	75
Mounting depth [mm]	157
IP protection class	IP20
IP protection class	protection cl. I
Material	aluminium
Colour of body	black
RAL	9011
Net weight [kg]	0.11
EAN number	9008905797033

Energy label

CE

The values are rated values. Power and luminous flux are initially subject to a tolerance of +/- 10%.
Colour temperature tolerance: +/- 150 K. The values apply to an ambient temperature of 25°C unless otherwise specified.