ZUMTOBEL

TECTON/CONTUS T/KK AK 1498 PP WH 22170178

Cover strip, white

Cover strips for the mounting rail or cable channel made of plastic polypropylene in white. Dimensions: 1498 x 46 x 10 mm weight: 0.1 kg



ZS_TEC_F_Abdeckstreifen.jpg

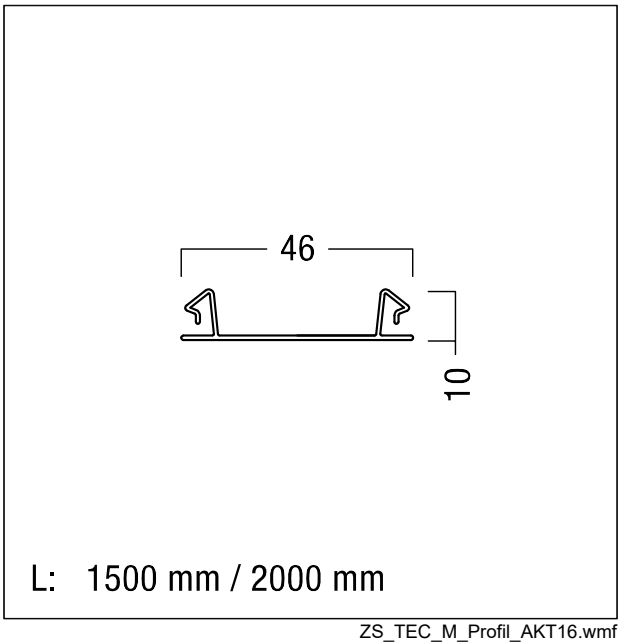

ZS_TEC_M_Profil_AKT16.wmf

We reserve the right to make technical changes without prior notice. 12.06.2026 © Zumtobel - 5-year guarantee in compliance with the terms of guarantee at www.zumtobel.com/guarantee