TECTON T AK-GP 1498 PP WH (4pcs) 22170736

Cover strip, white

Cover strips (4 pieces) for the mounting rail made of plastic polypropylene in white. Dimensions: 1498 x 47 x 1 mm weight: 0.1 kg



ZS_TEC_F_Abdeckstreifen_WH.jpg

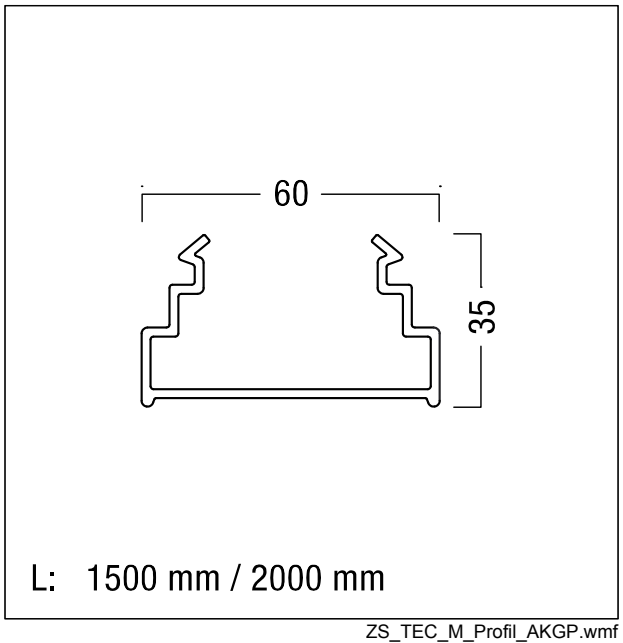

ZS_TEC_M_Profil_AKGP.wmf

We reserve the right to make technical changes without prior notice. 20.01.2020 © Zumtobel - 5-year guarantee in compliance with the terms of guarantee at www.zumtobel.com/guarantee