ZUMTOBEL

TECTON TE BK 22170772

Electric feed, black

Electric feed, black, made of roll-formed sheet steel; for electrical connection of continuous row system. Plug-in connecting terminals for 5 mains power lines, 2 x 2 emergency lighting conductors and 2 control lines. Includes end caps and protective covers to prevent accidental contact with electrical conductors. Dimensions: 344x63x56 mm; weight: 0.68 kg



ZS_TEC_F_TE_BK.jpg

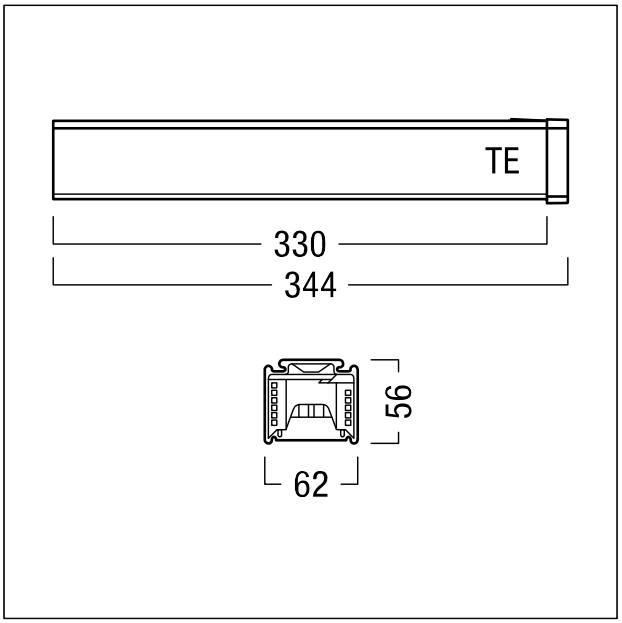

ZS_TEC_M_TECTON_TE.wmf

We reserve the right to make technical changes without prior notice. 14.07.2026 © Zumtobel - 5-year guarantee in compliance with the terms of guarantee at www.zumtobel.com/guarantee