ZUMTOBEL

TECTON TE WH 22128083

Electric feed, white

Electric feed, white, made of roll-formed sheet steel; for the electrical connection of the continuous row system. Plug-in connecting terminals for 5 mains cables, 2 x 2 emergency lighting cables and 2 control lines. Includes end caps and protective covers to prevent accidental contact with electrical conductors. Dimensions: 344x63x56 mm; weight: 0.68 kg



ZS_TEC_F_TE_WH.jpg

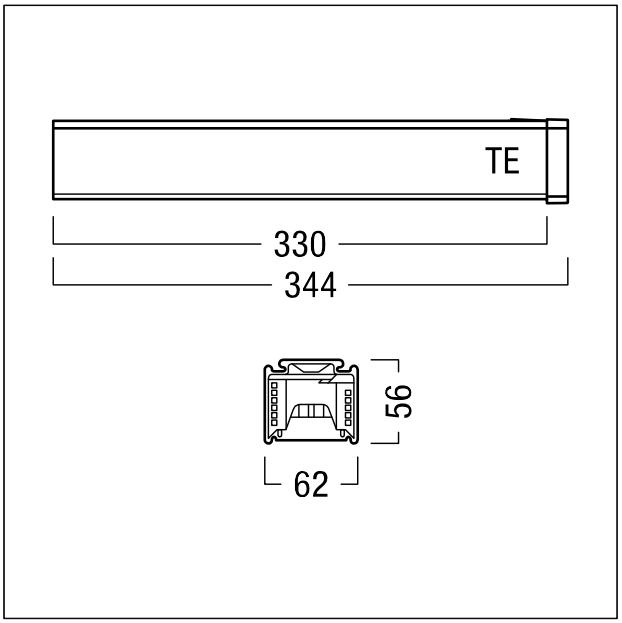

ZS_TEC_M_TECTON_TE.wmf

We reserve the right to make technical changes without prior notice. 12.06.2026 © Zumtobel - 5-year guarantee in compliance with the terms of guarantee at www.zumtobel.com/guarantee