1

TECTON TE /
TECTON TE 500

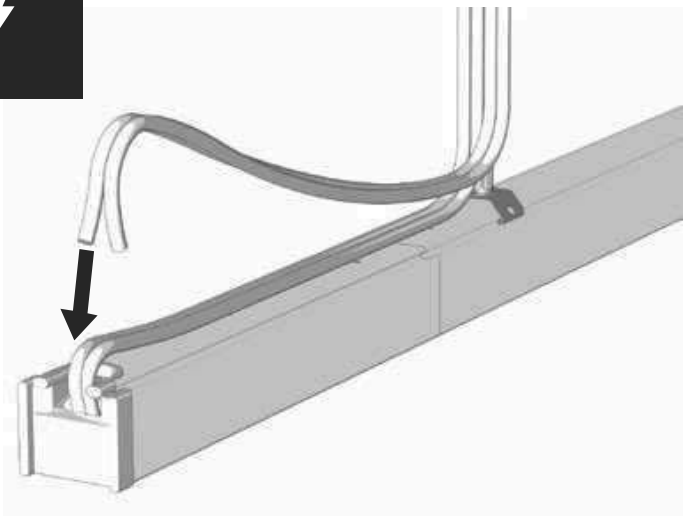

TECTON TM 750 /
TECTON TM TA/TE 500

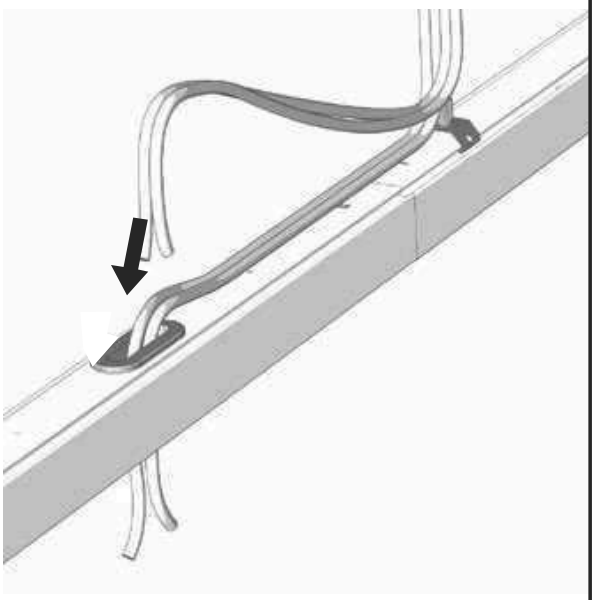

i

Standard Portfolio

	Nominal Usage	Electrical Specifications		
PE	Protective Earth	2,5 mm²	AC 220-240/415 V	16 A
N	AC Power Supply Neutral Conductor			
L1	AC Power Supply Line			
L2	AC Power Supply Line			
L3	AC Power Supply Line			
EL1	AC Power Supply LineAC Power Supply / DC Power Supply Emergency Line (Circuit 1)	1,5 mm²	AC 220-240 V DC 0-250 V	10 A
EL2	AC Power Supply LineAC Power Supply / DC Power Supply Emergency Line (Circuit 2)			
EN1	AC Power Supply / DC Power Supply Emergency Neutral Conductor (Circuit 1)			
EN2	AC Power Supply / DC Power Supply Emergency Neutral Conductor (Circuit 2)			
D1	Control Line (DALI DA+, DSI, KNX, SwitchDIM)			
D2	Control Line (DALI DA-, DSI, KNX, SwitchDIM)			

2

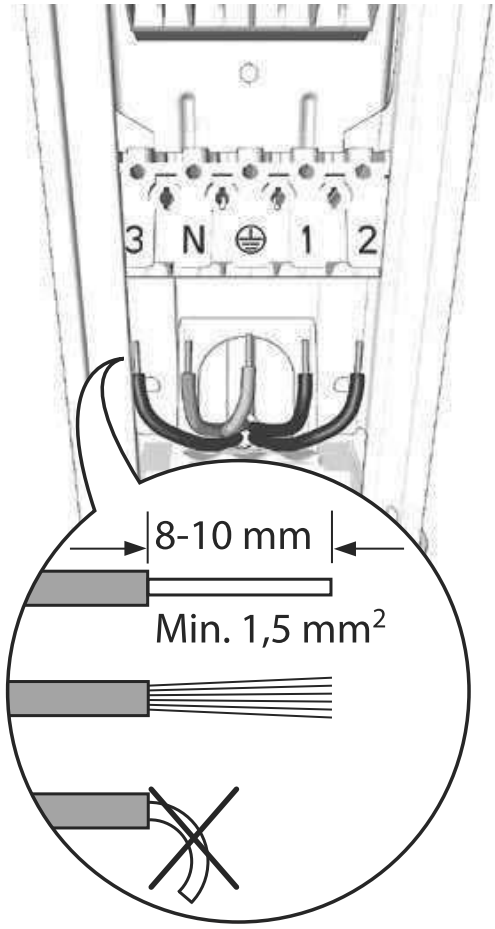
3 N 1 2
8-10 mm
Min. 1,5 mm²

3

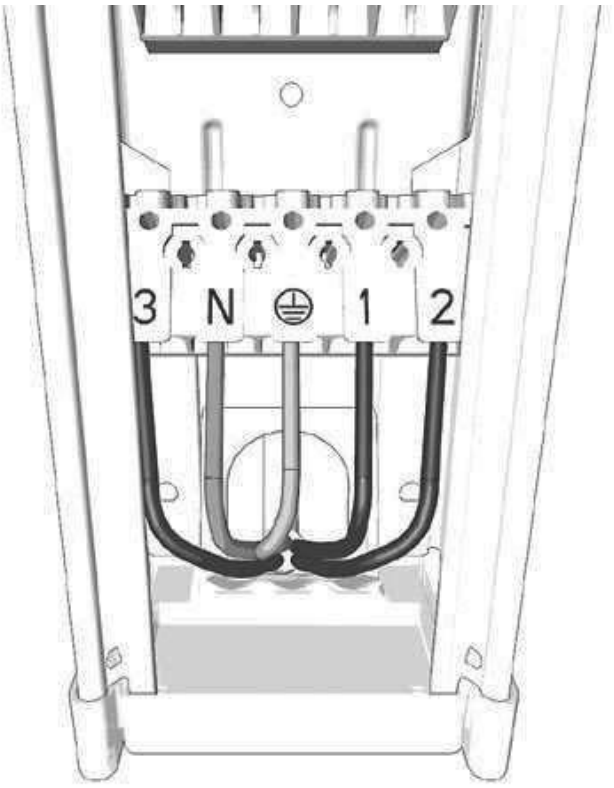
3 N 1 2

4

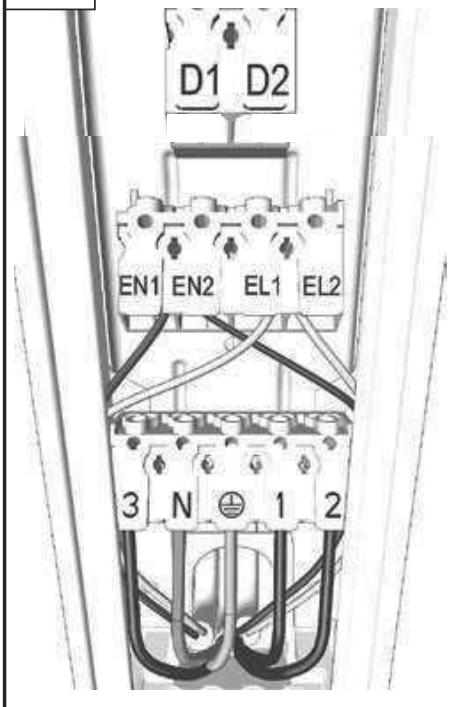
D1 D2
EN1 EN2 EL1 EL2
3 N 1 2

5

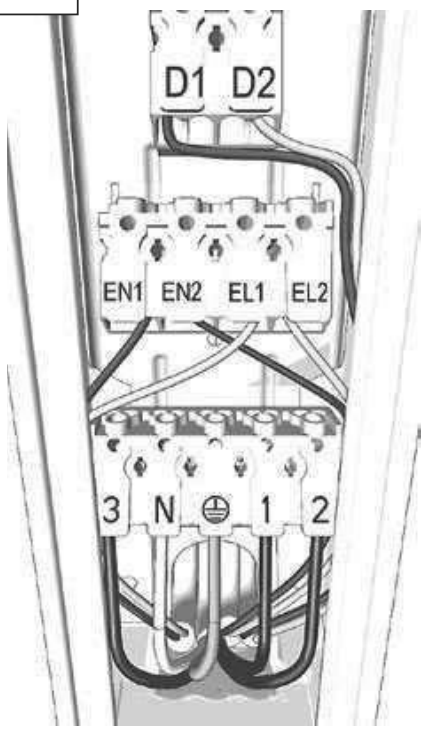
D1 D2
EN1 EN2 EL1 EL2
3 N 1 2

6

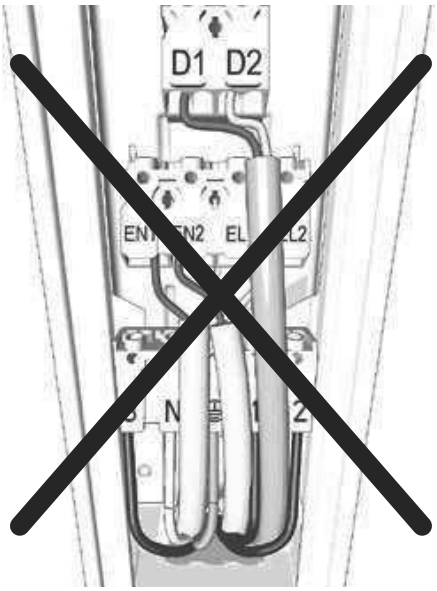
D1 D2