ZUMTOBEL

TECTON T 2000 BK 22170776

Trunking

Trunking made of roll-formed sheet steel in black. 11 conductors embedded in an integral conductor moulding. 5 mains power lines (5 x 2.5mm²/16A) plus 2 x 2 conductors (4 x 1.5mm²/10A) for integrating emergency lighting using two independently isolated circuits, plus and 2 control-line conductors (2 x 1.5mm²/10A). Tool-free connection using electrical feed kit. Dimensions: 2001 x 69 x 60 mm; weight: 3.71 kg



ZS_TEC_F_Trageschiene_BK.jpg

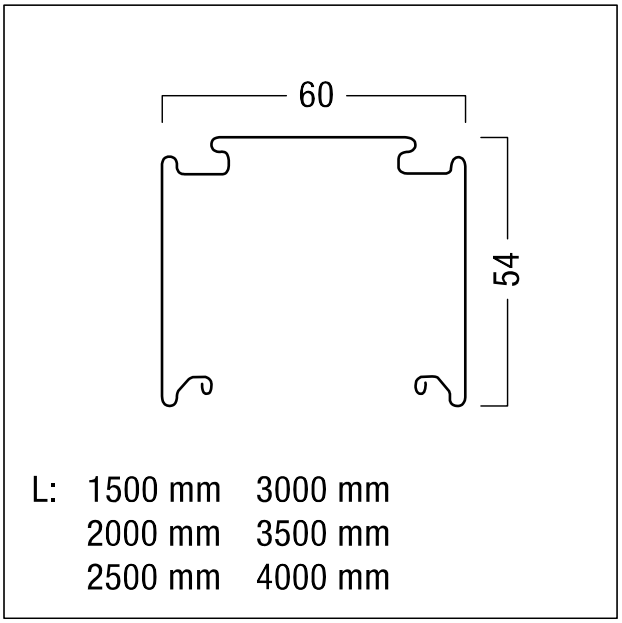

ZS_TEC_M_Tragschienen.wmf

We reserve the right to make technical changes without prior notice. 14.07.2026 © Zumtobel - 5-year guarantee in compliance with the terms of guarantee at www.zumtobel.com/guarantee