ED-CCW 01/02/03 b+c

Control point, square-edge white

Art. no. 22154658

Control point for running 3 scenes and controlling the lighting level; white and printed with "1", "2", "3" plus "luminaire group 1" and "luminaire group 2" pictograms

Application

The Circle control point can be used to recall three scenes for different room uses and activities via its 3 scene keys arranged in a circular layout. A green illuminated circle segment indicates the active scene.
The central On/Off button is used when entering or leaving the room. This button is illuminated by a surrounding red ring when the room is unoccupied, helping orientation on entering the room.
In addition, the user can manually adjust the active scene using two rocker switches for controlling the light level of two luminaire groups.
The Circle control point is a wall-mounted control unit in standard switch size. It is made of plastic in a white satin-matt finish and square-edge design.
All buttons are printed with intuitive pictograms. An On/Off symbol is shown on the central switch. The scene keys are printed with "1", "2", "3" and the two rocker switches with "luminaire group 1", "luminaire group 2".



Design notes

- Power supply via DALI control line
- 3 DALI bus loads
- for DIMLITE: via Control-In line
- The Circle control point is assigned to a specific output group or specific room by custom configuration of the higher-level light management system.

We reserve the right to make technical changes without prior notice. 06.01.2021 © Zumtobel - 5-year guarantee in compliance with the terms of guarantee at www.zumtobel.com/guarantee

Wiring scheme

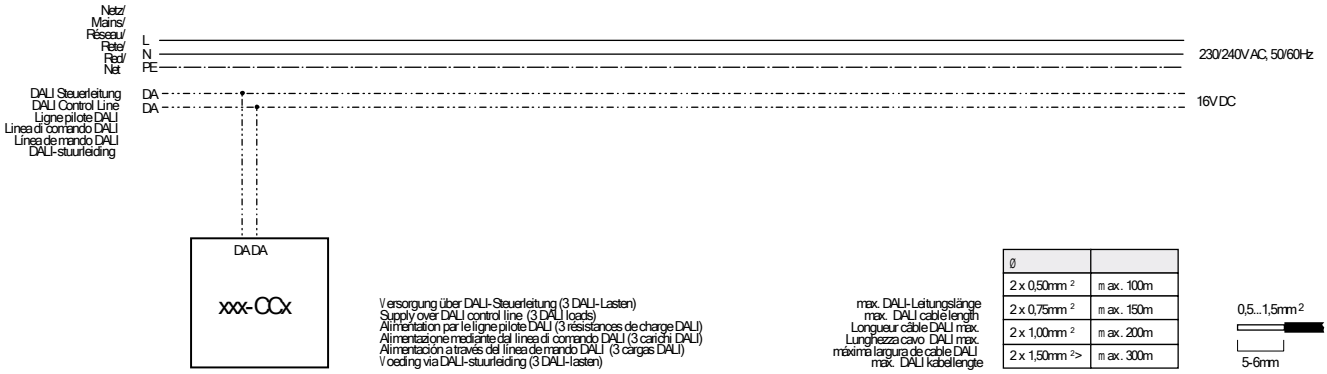

Mounting and installation instructions

Fit the control point into a standard Eurobox or UK metal backbox (not included):

- the installation box must be fitted so that its fixing screws are horizontal.
- use a screw / plug-in terminal (included) to connect power-supply and bus lines,
- screw the base of the control point into the installation box
- then simply snap the cover onto the control point without using screws
- Use a damp cloth or antistatic wipe to clean the control point

Technical data

Nominal voltage	DALI voltage (approx. 16 V DC)
Permitted input voltage	12...22.5V DC
Power supply	via DALI control line (16V DC) for DIMLITE: via Control-In line (14 V DC)
Current consumption	3 DALI loads (6mA)
Power loss	< 0.1 W
DALI signal	16 V clocked (Manchester code)
Operation	Come/Go key, 3 scene keys, 2 light rocker keys
Terminals	0,5-1,5 mm²
Protection type	IP20
Housing material	plastic, halogen-free
Case colour	white (equivalent to RAL 9010)
Installation	in Euro box, single, dimensions according to DIN 0606 (diameter 60 mm, depth 42 mm), or UK metal back box
Dimensions	87 x 87 x 13 mm (upper section only)
Permitted ambient temperature	0 °C ... +50 °C
Weight	Approx. 0.15 kg

Dimension

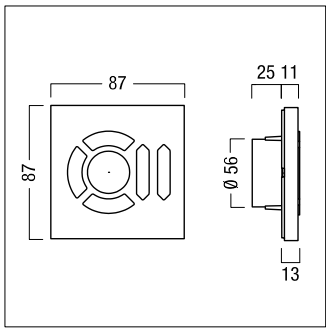

Label/connections

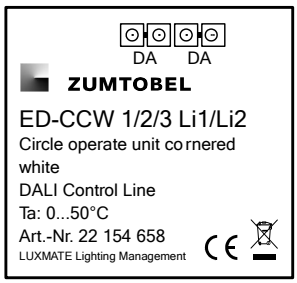

We reserve the right to make technical changes without prior notice. 06.01.2021 © Zumtobel - 5-year guarantee in compliance with the terms of guarantee at www.zumtobel.com/guarantee