UWP150D-1M24V (Product No.: 102200430101)



Summary

UWP150D-1M24V is a dimming driver that can provide constant voltage output. Complies with DALI standard protocol IEC 62386. LED driver featuring the dimming by DALI master/Touch DIM(PushDIM) switch, with smooth dimming curve and are flicker free.

Product Feature

·Single channel output with 24V CV direct current
·Wide voltage input range from 100VAC to 240VAC
·With built-in active PFC function
·Meet DALI protocol IEC 62386-207
·Support Touch DIM(Push DIM) function
·Ultra-thin design, Waterproof level IP67, High effciency up to 87.5%
·Dimming effect smooth, no flicker
·Protections: Short circuit, over load, over voltage, lightning protection
·suitable for LED CV lighting, such as LED module, LED strip light, LED tube, and so on

Application



Technical Parameters

Model	UWP150D-1M24V	
Input	Efficiency	87.5%@230VAC, Full load
	Voltage	100VAC-240VAC
	Frequency	50~60Hz
	Power Factor	>0.95@230VAC, Full load
	THD	<10%230VAC, Full load
	Standby power	<0.7W
	Current	2Amax@100VAC
	Inrush Current	Cold start 50A(measured50% Ipeak twidth=60us) @230VAC
Output	Direct voltage	24VDC
	Rated current	6.25A
	Rated Power	150W
	Voltage Tolerance	±2%
	Over voltage protection	25-36VDC
	Ripple and noise(max)	<120mVp-p
	Channel	1
Protection	Short Circuit	Close output, recovers automatically after fault removed
	Over Voltage	Colse output recovers automatically of fault after restart
	Over Load	Hic cup recovers after fault condition is removed
Safety&EMC	Surge	L-N: 2kV,L,N-PG:4kV
	Withstand Voltage	I/P-O/P:3000VAC/5mA I/P-PG:1500VAC/5mA O/P-PG:500VAC/5mA
	Safety Standards	IEC/EN61347-1, IEC/EN61347-2-13, GB19510.1, GB19510.14
	EMC Eission	EN50515, EN61000-3-2 Class C, IEC61000-3-3, GB/T17743
	EMC Immunity	EN61000-4-2,3,4,5,6,8,11 EN61547,GB17625.1
Function	Dimming mode	DALI/Touch DIM(Push DIM)
	Dimming range	0.1%-100%
	DALI standard	IEC62386-101, IEC62386-102, IEC62386-207
Others	Working Temp.	-25°C~+60°C
	Storage Temp.; Humidity	-40°C~85°C, 20-90%RH
	Tc	90°C
	Material	Metal
	IP Rating	IP67
	Lifetime	50,000h@tc:85°C
	Warranty Condition	5 years
	Switch Cycle	>100,000 times
	Packing Size	Net weight: 820g±5%/PCS; 20PCS/Carton; 17kg±5%/Carton; Carton Size: 325*315*195mm(L*W*H)
	Dimension	290*61*25mm(L*W*H)

Dimension(mm)

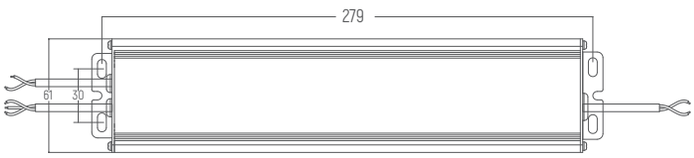

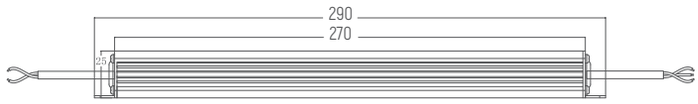

Wiring Diagram

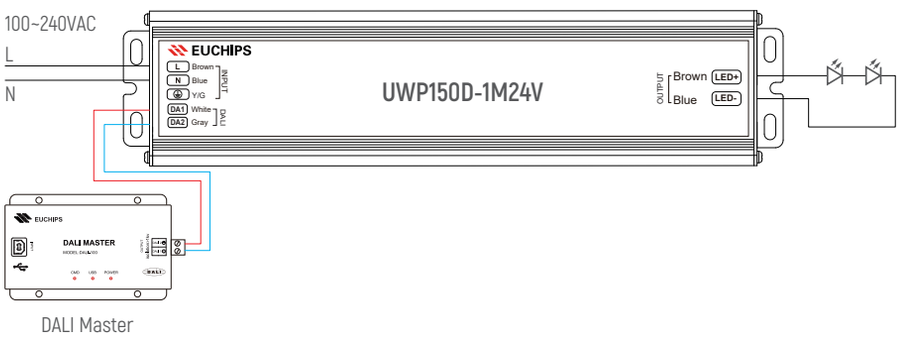

DALI Master

Dimming Curve

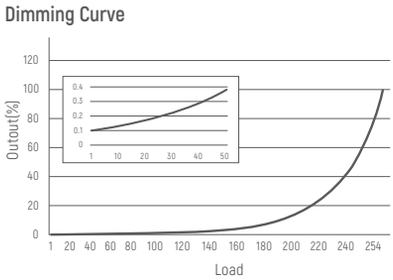

Derating Curve

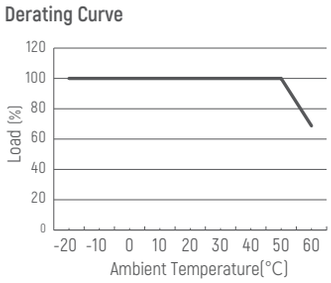

PF vs Load

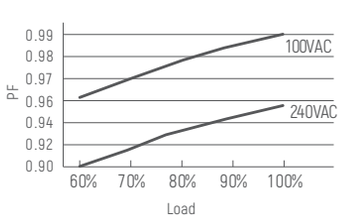

Efficiency vs Load

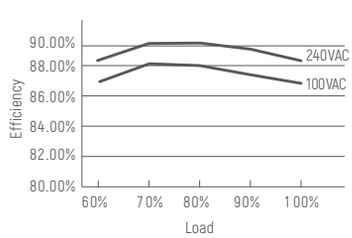

DALI Diagram

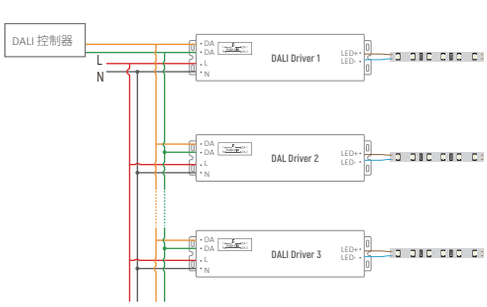

Touch DIM(Push DIM) Diagram

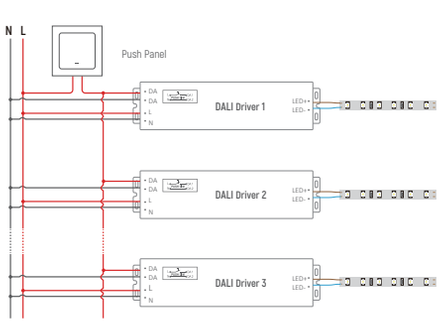

Remark: Only use open push button without indicator light. Maximum cable length between each Unit: 20 meters.

Touch Dim(Push DIM) Function

1. Press the Touch DIM switch for 8s or more,the driver can be controlled via Touch DIM switch.
2. Short press the Touch DIM switch (<0.5s) to control the lamp on or off.
3. Long press the Touch DIM switch (>0.5s) to dim the brightness of light. The dimming direction will change every time after pressing switch.
4. Double-click the Touch DIM switch (<0.3s), then all lamps connected on the device will be set maximum brightness.
5. The brightness adjustment range is 1%-100%, and the light can be turned off through short pressing when doing the adjustment with long pressing Touch DIM switch.
6. With the Power off memory function, the power-down state will be recovered when power on again.

Max. quantity of drivers per miniature circuit breaker

MCB type	B16	C16
Installation	1.5mm^2	1.5mm^2
Quantity	3	6

※ The contents of this manual are updated without prior notice. If the function of the product you are using is inconsistent with the instructions, the function of the product shall prevail.Please contact us if you have any questions.

Max. distance between independent use LED driver and LED modules

Distance	2.5m/8ft	5m/16ft	10m/32ft	15m/49ft
Cable section	0.75mm^2/AWG18	1mm^2/AWG17	1.5mm^2/AWG15	2.5mm^2/AWG13