EUP150D-1W24V-0



Summary

EUP150D-1W24V-0 is a constant voltage output LED dimming driver that can be used indoors, and this driver meets the requirements DALI standard protocol IEC62386. Support DALI, adjustable resistance, PWM, Touch DIM dimming mode.

Product Features

· Single channel constant voltage output, 24V DC output per channel

· Support passive 0/1-10V analog dimming signal

· Dimming range from 0-100%, LED brightness starting from 1%

· Smooth dimming curve without jitter

· Load protection, short circuit protection, overcurrent protection

Application


LED Strip Light


LED Tube











Technical Paramaters

Model	EUP150A-1H24V-1	
Input	Efficiency	93%@230VAC, Full load
	Voltage	100VAC-240VAC
	Frequency Range(Hz)	50/60Hz
	Power Factor	≥0.95@230VAC, Full load
	THD	<10%@230VAC, Full load
	Current	1.75Amax@100VAC
	Inrush Current	Cold start,51.2A 480uS@230VAC
	Standby power	≤1W
	No load power	≤1W
	Inrush current	≤ 1 s, at100Vac (When the light begins to shine)
Output	Current / Voltage / Power	6.25A/24VDC/150W
	Output Voltage	±5%
	Current Accuracy	±3%
	Ripple current	±5%
	No load output voltage	25.2V max
Function	Dimming type	DALI / PUSH DIM
	Dimming range	0%-100%
	Dimming curve	Logarithm
Protection	Over load	No output, troubleshooting self-recovery
	Short circuit	No output, troubleshooting self-recovery
	Over Current	No output, troubleshooting self-recovery
Safety&EMC	Surge	L-N 1000VAC N-PE2000V L-PE2000V
	Withstand Voltage	I/P-O/P: 3750VAC/1min/5mA ; I/P-GND: 1500VAC/1min/5mA ; O/P-GND : 500VAC/1min/5mA
	Safety standards	IEC/EN62384,IEC/EN61347-1, IEC/EN61347-2-13, GB19510.1, GB19510.14
	EMC Eission	EN61000-4-2, 3, 4, 5, 6, 8, 11; EN55015, EN61000-3-2; GB17626.3, 4, 5, 6, 8, 11; GB17743 GB17625.1, 2
	Insulation Resisance	5M Ω
Others	Working temp.	-30°C~50°C
	Storage Temp., Humidity	-40°C~85°C, 20-90%RH
	Tc	70°C
	Material	Metal
	IP rating	IP20
	Lifetime	30,000h@tc:70°C
	Warranty	3 year
	Switch cycle	>15,000 times
	Packing size	Net weight: 650g±5%/PCS; 18PCS/Carton; 12.2kg±5%/ box; Outer box size: 303*221*265mm(L * W * H)
	Dimension	206*75*40mm (L * W * H)

Dimension(mm)

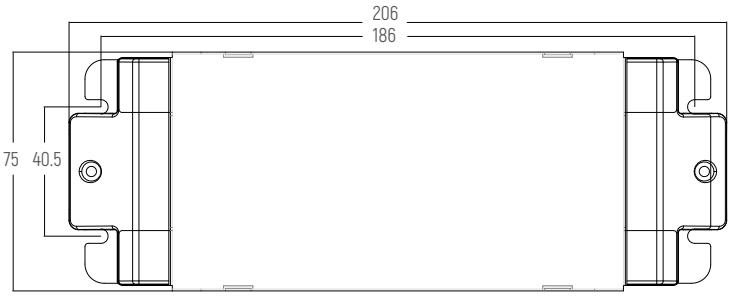

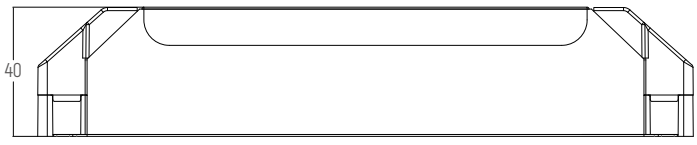

Wiring Diagram

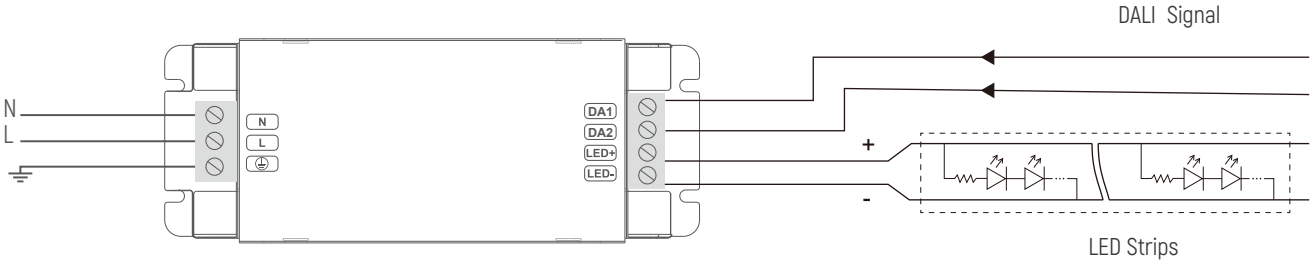

Dimming Curve

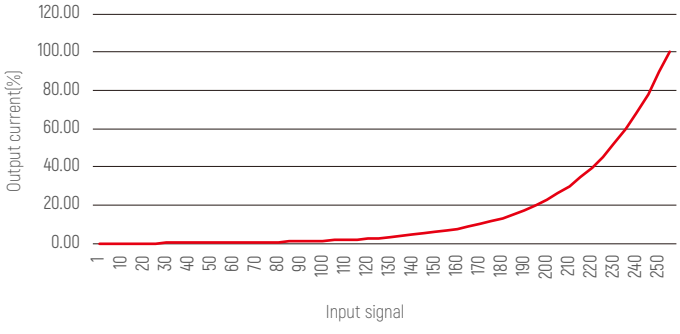

Efficiency vs Load Curve

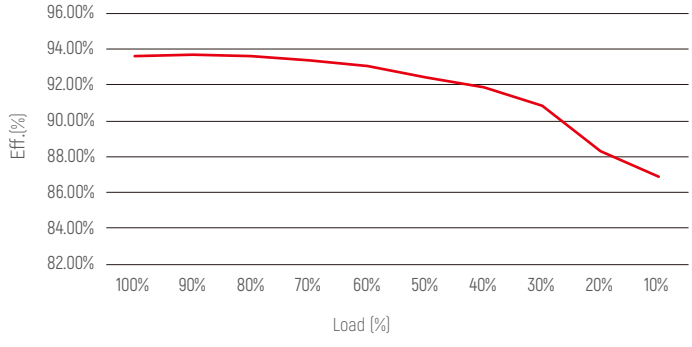

PF vs Load Curve

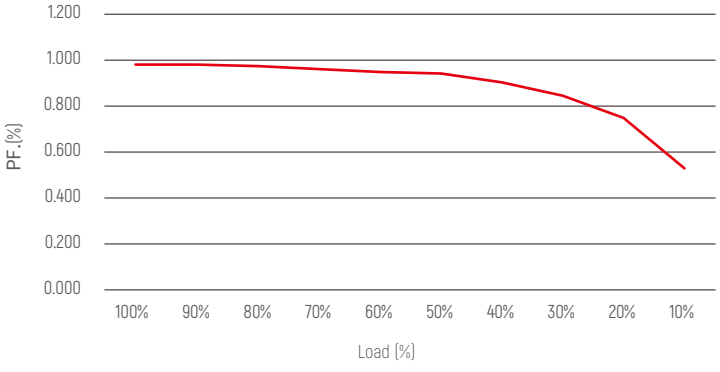

THD vs Load Curve

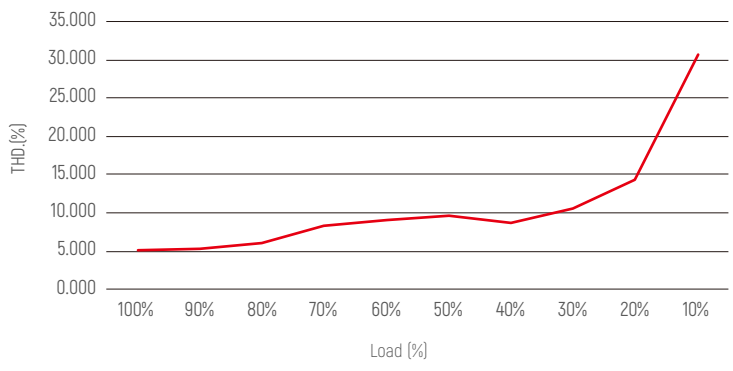

DALI Diagram

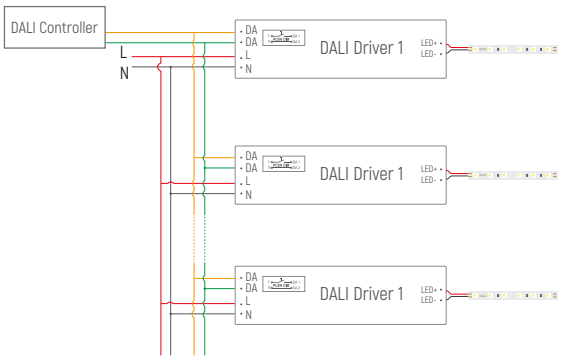

Push DIM(Touch DIM) Diagram

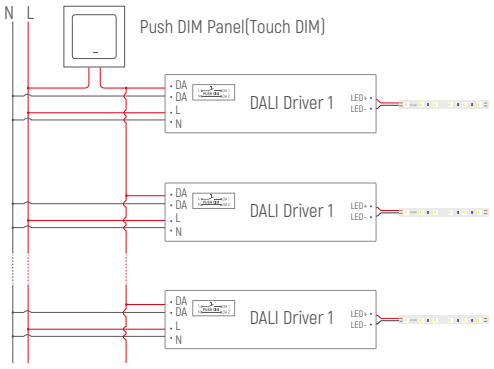

Remark: Only use open push button without indicator light. Maximum cable length between each Unit: 20 meters.

Push DIM Function

1. Press the Push DIM (Touch DIM) switch for 8s or more,the driver can be controlled via Push DIM switch.
2. Short press the Push DIM (Touch DIM) switch (<0.5s) to control the lamp on or off.
3. Long press the Push DIM (Touch DIM) switch (>0.5s) to dim the brightness of light. The dimming direction will change every time after pressing switch.
4. Double-click the Push DIM (Touch DIM) switch (<0.3s), then all lamps connected on the device will be set maximum brightness.
5. The brightness adjustment range is 1%-100%, and the light can be turned off through short pressing when doing the adjustment with long pressing Push DIM (Touch DIM) switch.
6. With the Power off memory function, the power-down state will be recovered when power on again.

Max. quantity of drivers per miniature circuit breaker

MCB	Input Voltage 230V Drivers	MCB	Input Voltage 230V Drivers
B10	3pcs	C10	5pcs
B13	4pcs	C13	6pcs
B16	4pcs	C16	8pcs
B20	6pcs	C20	10pcs
		D16	9pcs

Installation Precautions

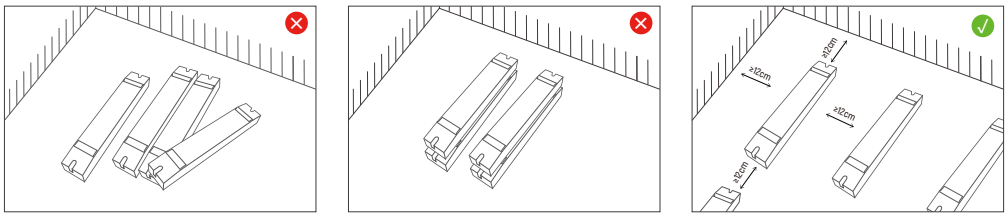

Please do not stack the products. The distance between two products should be>12cm so as not to affect heat dissipation and the lifespan of the products.

Warranty Agreement

1. Warranty periods from the date of delivery : 3 years.
2. Free repair or replacement services for quality problems are provided within warranty periods.

Warranty exclusions below:

1. Beyond warranty periods.
2. Any artificial damage caused by high voltage, overload, or improper operations
3. Products with severe physical damage.
4. Damage caused by natural disasters and force majeure.
5. Warranty labels and barcodes have been damaged.
6. No any contract signed by EUCHIPS.

· Repair or replacement provided is the only remedy for customers. EUCHIPS is not liable for any incidental or consequential damage unless it is within the law.

· EUCHIPS has the right to amend or adjust the terms of this warranty, and release in written form shall prevail.

Cautions

1. This product must be installed and adjusted by a qualified professional.
2. This product is non waterproof, need to avoid sun and rain.In case of outdoor use, please ensure it is mounted in a water proof enclosure.
3. Good heat dissipation conditions extend product life. Please install the product in a well-ventilated environment.
4. Please make sure LED power supply output voltage, current is used to meet the product requirements.
5. Please ensure that adequate sized cable is used from the controller to the LED lights to carry the current. Please also ensure that the cable is secured tightly in the connector.
6. Due to safety concerns, PVC or rubber cord of 0.75- 2.5mm² is recommended for input and output terminal(s)(excluding signal terminals). Flat power cord is not suitable.Ensure all wire connections and polarities are correct before applying power to avoid any damages to the LED lights.
7. In case of malfunction, do not repair it yourself.

※ The contents of this manual are updated without prior notice. If the function of the product you are using is inconsistent with the instructions, the function of the product shall prevail.Please contact us if you have any questions .