EUP75D-1H24V-0 (Product No.:102200061101)



Summary

EUP75D-1H24V-0 is a constant voltage mode output LED driver and complies with DALI standard protocol IEC 62386. This driver can be connected to DALI main controller or Touch DIM to achieve a smooth dimming effect.

Product Features

· Single channel constant voltage output,3.1A Max
· Meet DALI protocol IEC 62386
· Support Touch DIM function
· High input voltage of 220VAC ~ 240VAC
· Dimming effect smooth, no flicker
· Over load protection; over voltage protection; short circuit over temperature
· IP20, suitable for indoor LED lighting application

Application



Technical Paramaters

Model	EUP75D-1H24V-0	
Input	Efficiency	>85%@230VAC,Full load
	Voltage	220VAC-240VAC
	Frequency Range(Hz)	50/60Hz
	Power Factor	≥0.95@230VAC,Full load
	THD(full load)	<10%@230VAC, Full load
	AC Current(max)	0.4Amax@230VAC
	Inrush Current(max)	Cold start,45A@230VAC
Output	Current(A)/Voltage (VDC) Power(W)	3.1A/24VDC/74.4W
	R & N (Max)	240mVp-p
	Channel	1
	Current Tolerance	±3%
	Turn on delay Time	<1.5s, at230Vac (When the light begins to shine)
Function	Dimming Type	DALI Dimming / Touch-dim
	Dimming Range	1%-100% Dimming to off
Protection	Over voltage	Hiccup, recovers after fault condition is removed
	Over temperature	Shut down and auto-restart after normal temperature
	Over load	Hiccup, recovers after fault condition is removed
	Short Circuit	Hiccup, recovers after fault condition is removed
Safety& EMC	Surge	L-N:1KV
	Withstand Voltage	I/P-O/P: 3000VAC/1min/5mA
	DALI Standard	IEC 62386-101: 2014, IEC 62386-102: 2014; IEC 62386-207: 2009, DALI 1.0
	Safety Standards	EN61347, GB19510
	EMC Emission	EN50515, EN61000-3-2
	EMC Immunity	EN61000-4-2, 3, 4, 5, 6, 8, 11; EN61547
Others	Working Temp.	-20°C~50°C
	Storage Temp., Humidity	-40°C~85°C, 20-90%RH
	tc	90°C
	Material	Metal
	IP Rating	IP20
	Lifetime	30,000h@tc:80°C
	Warranty Condition	3 years
	Switch Cycle	>15,000 times
	Packing(weight)	Net weight: 460g±5%/PCS; 20PCS/Carton;10.5kg±5%/Carton; Carton Size: 244*223*199mm(L*W*H)
	Dimension	213*54*33mm（L*W*H）

Dimension(mm)

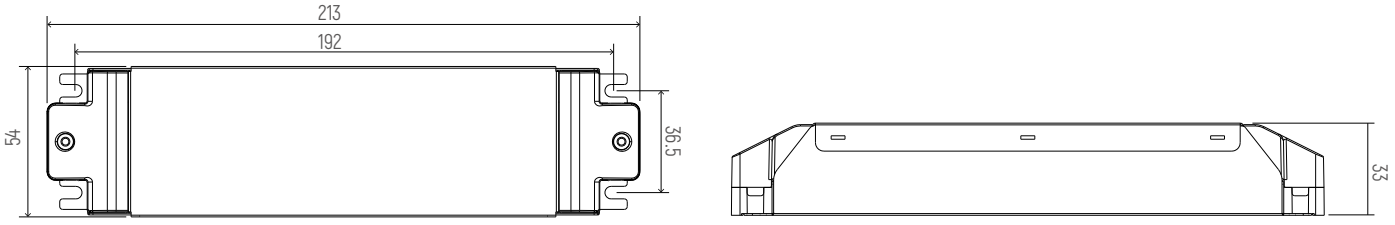

DALI Wiring



Dimming Curve

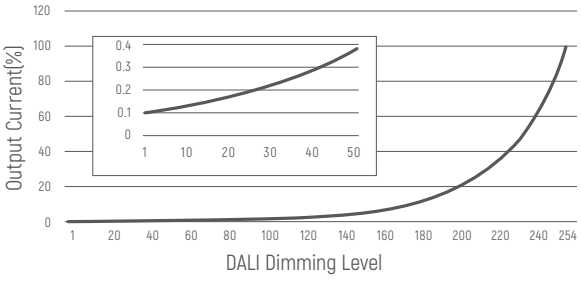

DALI Diagram

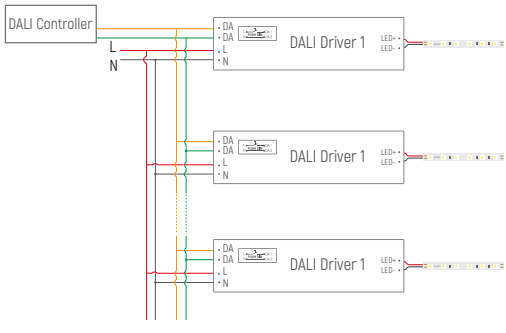

Push DIM(Touch DIM) Diagram

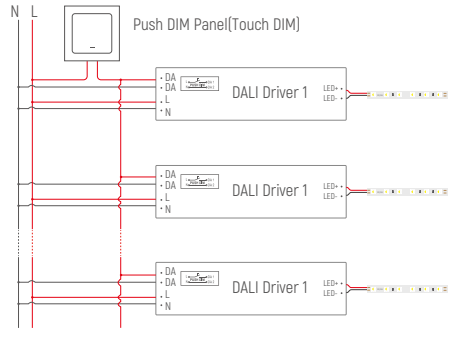

Remark: Only use open push button without indicator light. Maximum cable length between each Unit: 20 meters.

Push DIM Function

1. Press the Push DIM (Touch DIM) switch for 8s or more,the driver can be controlled via Push DIM switch.
2. Short press the Push DIM (Touch DIM) switch (<0.5s) to control the lamp on or off.
3. Long press the Push DIM (Touch DIM) switch (>0.5s) to dim the brightness of light. The dimming direction will change every time after pressing switch.
4. Double-click the Push DIM (Touch DIM) switch (<0.3s), then all lamps connected on the device will be set maximum brightness.
5. The brightness adjustment range is 1%-100%, and the light can be turned off through short pressing when doing the adjustment with long pressing Push DIM (Touch DIM) switch.
6. With the Power off memory function, the power-down state will be recovered when power on again.

Cautions

1.This product should be installed by qualified personnel.

2.This product is non waterproof, need to avoid sun and rain.In case of outdoor use, please ensure it is mounted in a water proof enclosure.

3.Good heat dissipation conditions extend product life. Please install the product in a well-ventilated environment.

4.Please make sure LED power supply output voltage, current is used to meet the product requirements.

5.Please ensure that adequate sized cable is used from the controller to the LED lights to carry the current. Please also ensure that the cable is secured tightly in the connector.

6.Due to safety concerns, PVC or rubber cord of 0.75- 2.5mm² is recommended for input and output terminal(s)(excluding signal terminals). Flat power cord is not suitable.Ensure all wire connections and polarities are correct before applying power to avoid any damages to the LED lights.

7.In case of malfunction, do not repair it yourself.

※ The contents of this manual are updated without prior notice. If the function of the product you are using is inconsistent with the instructions, the function of the product shall prevail.Please contact us if you have any questions .