ED-SENS mini CR

Passive infrared motion sensor

Art. no. 22170200

Combi-sensor - movement infrared (PIR) and light, for ceiling recessing

Application

The ED-SENS mini CR multi-sensor combines the functionality of a presence sensor and light sensor in a ceiling recessed unit.

Design notes

- The ED-SENS mini multi-sensor is intended for use with LITECOM (as of version 2.1) .
- The presence function can be used at the DALI gateway netlink CCD (as of version 3.61).
- The sensor is not compatible with other systems.
- Fan heaters, fans etc. and printers or copiers located in the detection range can trigger incorrect detection of a person in the room.
- The sensor must be positioned so that the detection range of the sensor is in the lighting range of the controlled luminaires.
- To avoid erroneous measurements the luminaires must not emit direct light into the sensor. Strongly reflective surfaces may also trigger erroneous functions.
- Current consumption 3 DALI loads (6 mA)



Functional description

The ED-SENS mini CR sensor detects the presence and absence of people. The constant light function (look-down principle) enables the lighting in the room to be matched to the naturally available ambient light.
The light and presence function of the ED-SENS mini CR is transmitted to LITECOM which converts this into direct control commands for the lighting. This results in more comfort, continuously adapted lighting and energy savings.
The motion control and light control can be activated and set independently of each other.

We reserve the right to make technical changes without prior notice. 06.01.2021 © Zumtobel - 5-year guarantee in compliance with the terms of guarantee at www.zumtobel.com/guarantee

Wiring scheme

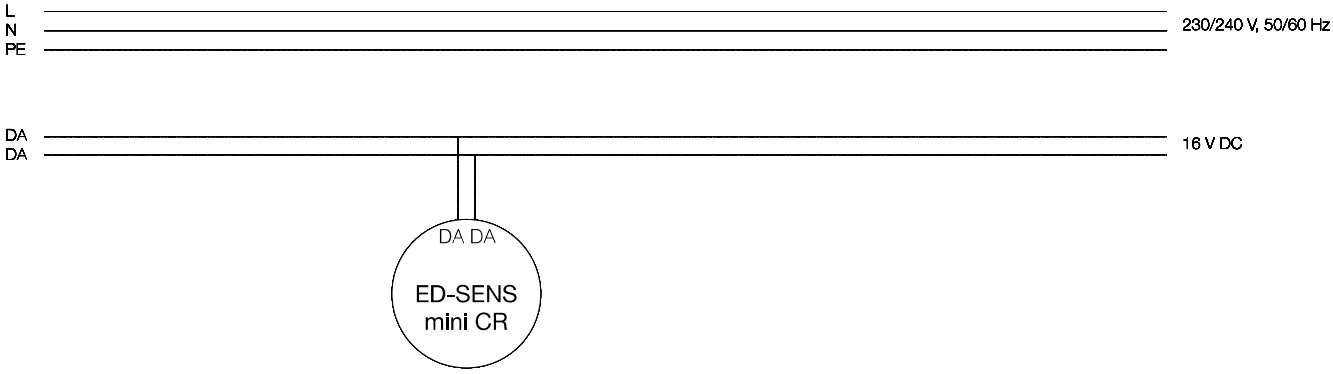

Mounting and installation instructions

- The device must only be used in the specified application.
- Observe the valid safety and accident prevention regulations.
- Power supply must be interrupted for mounting and installing the device.
- Mounting, installation and commissioning the device must only be carried out by qualified technicians.
- Hazardous voltage may occur on the DALI terminals and DALI power line in case of an error.

Technical data

Power supply	via DALI control line (16V DC)
Current consumption	6 mA (3 DALI loads)
Interface	DALI control line (DA, DA)
Addressing	1 eD adress for presence detection 1 eD adress for light detection 1 eD address for remote control (not occupied)
Presence monitoring range	360°
Miscellaneous	Light measurement at sensor head: 10 – 650 lx (corresponds to approx. 15 – 2□ 000 lx on the measurement plane)
Terminals	0.5–1.5 mm² (single or stranded wire)
Protection type	IP20
Protection class	Class II
Housing material	flame-resistant polycarbonate; halogen-free
Installation	Ceiling recessing
Dimensions	58 x 65.4 mm (Ø x H, in mm)
Permitted ambient temperature	0–+50 °C
Weight	Approx. 0.04 kg

Dimension

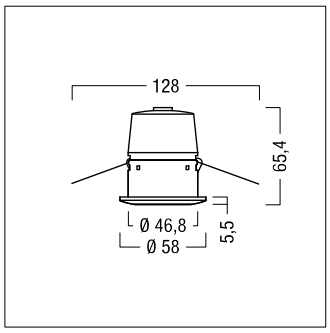

Label/connections



We reserve the right to make technical changes without prior notice. 06.01.2021 © Zumtobel - 5-year guarantee in compliance with the terms of guarantee at www.zumtobel.com/guarantee