ED-SENS mini CM

Passive infrared motion and light sensor

Art. no. 22170201

Combi-sensor - movement infrared (PIR) and light for ceiling surface-mounting

Application

The ED-SENS mini CM multi-sensor combines the functionality of a motion sensor and light sensor in a device for installing in the ceiling.

Design notes

- The ED-SENS mini multi-sensor is intended for use with LITECOM (as of version 2.1) .
- The presence function can be used at the DALI gateway netlink CCD (as of version 3.61).
- The sensor is not compatible with other systems.
- Fan heaters, fans etc. and printers or copiers located in the detection range can trigger incorrect detection of a person in the room.
- Optional cover for reducing the movement detection range. The range can be reduced from 360° to 240°.
- The sensor must be positioned so that the detection range of the sensor is in the lighting range of the controlled luminaires.
- To avoid erroneous measurements the luminaires must not emit direct light into the sensor. Strongly reflective surfaces may also trigger erroneous functions.
- Current consumption 3 DALI loads (6 mA)



Functional description

The ED-SENS mini CM sensor detects the presence and absence of people.
The constant light function (look-down principle) enables the lighting in the room to be matched to the naturally available ambient light.
The light and presence function of the ED-SENS mini CM is transmitted to LITECOM which converts this into direct control commands for the lighting. This results in more comfort, continuously adapted lighting and energy savings.
The motion control and light control can be activated and set independently of each other.

We reserve the right to make technical changes without prior notice. 06.01.2021 © Zumtobel - 5-year guarantee in compliance with the terms of guarantee at www.zumtobel.com/guarantee

Dimension

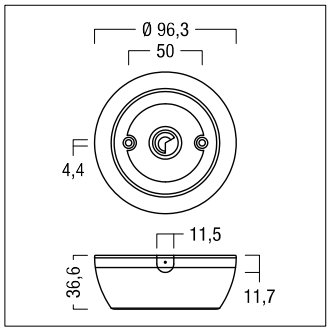

Label/connections



Technical data

Power supply	via DALI control line (16V DC)
Current consumption	6 mA (3 DALI loads)
Interface	DALI control line (DA, DA)
Addressing	1 eD adress for presence detection 1 eD adress for light detection 1 eD address for remote control (not occupied)
Presence monitoring range	360°
Miscellaneous	Light measurement at sensor head: 10 – 650 lx (corresponds to approx. 15 – 2□ 000 lx on the measurement plane)
Terminals	0.5–1.5 mm² (single or stranded wire)
Protection type	IP20
Protection class	Class II
Housing material	flame-resistant polycarbonate; halogen-free
Installation	Ceiling surface-mounting
Dimensions	93.3 x 36.6 (ø x H, in mm)
Permitted ambient temperature	0–+50 °C
Weight	Approx. 0.08 kg

We reserve the right to make technical changes without prior notice. 06.01.2021 © Zumtobel - 5-year guarantee in compliance with the terms of guarantee at www.zumtobel.com/guarantee