NORLYS VISBY 577

AC 220-240V 50-60Hz | IP 65 | LED

Visby 577XX0309
18.11.2025 v.09.8
www.norlys.no



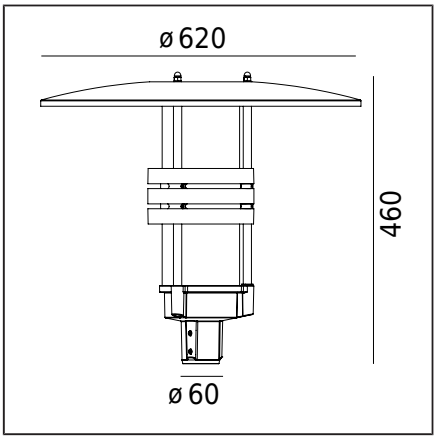

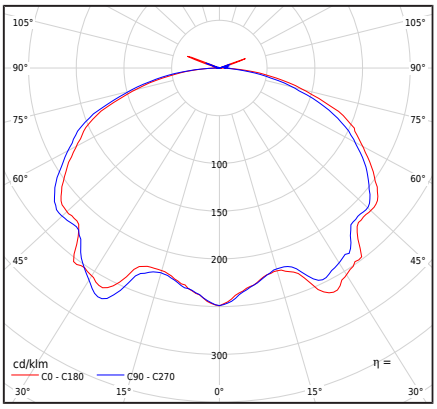

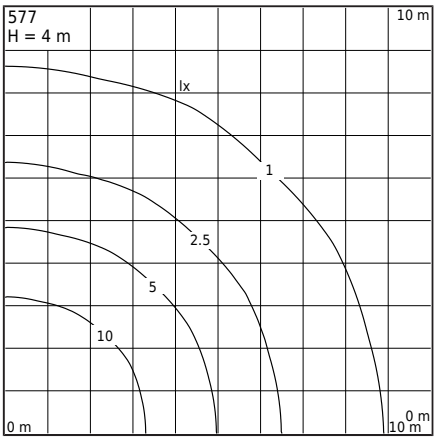

Type of luminaire

Type of lumianire	Pole luminaire.
Photometric body	Indirect light with rotationally symmetrical light distribution.
Characteristics of the luminaire	Surface-mounted luminaire designed to be installed on a lighting pole with a mounting post of Ø60mm.

General information

Materials	Powder painted aluminum cast. Lens - transparent plastic PMMA. Silicone gasket.
Mounting method	Fixing of the luminaire: fitting to Ø60mm pole.
Terminal	4.5m cable (H05VV-F 3G1 type), for connection inside the lighting pole (in appropriately selected electrical installation box).
Type of light source	LED module AC integrated Replaceable (LED only) light source by a professional.
Light control	Non-dimmable fixture
Luminaire weight net / gross	7,28kg / 8,92kg
Side area of luminaire	0,086m^2

Technical data

LED module	Yes
Light source wattage	27W
Luminaire wattage	27W
Lamp luminous flux	2950lm
Luminaire luminous flux	1525lm
Efficiency of the luminaire	56,5lm/W
ULOR	2,23%
Color temperature	3000K
Colour consistency (McAdam ellipse)	SDCM3
Colour rendering index CRI	80
L70B50 [wg LM-80]	>50 000h
Power Factor luminaire	PF>0,90
Ta Rated temperature	+25°C
Ambient temperature	TA MAX=+65°C
This product contains light source of energy efficiency class	E
Inrush current	2,63A/47,27µs
BUG rating	"B1-U2-G1"

Accessories sold separately

3070XX0009	Reduction

Spare parts

0905770101	Electric set.

Files to download

Photometric LDT files	Photometric IES files
Manual	

Indexes

Index	Color	RAL
577AL	ALUMINUM	9006
577GR	GRAPHITE	7016

Norlys AS
P.B 1014 Hoff, 0218 Oslo
Hovfaret 4B, 0275 Oslo
Norway
+47 24 12 40 11
firmapost@norlys.no

TÜVRheinland CERTIFIED — Management System ISO 9001:2015 IATF 16949:2016 — www.tuv.com ID 9108651873

PCC Cert CERTIFICATE ISO 14001

RoHS 2011/65/UE

Please read the manual before installing. Due to the dynamic development of lighting technology, additional information is available upon request. LED module must be replaced by a qualified person in accordance with applicable regulations. Condensation, which can occur in luminaires, is a natural phenomenon and does not impair the quality of the luminaire.