Project name	Location	Type	Revision number	Date

LIGHT LINEAR PT 1 - LI-10022 - 24 LED - 54 W - 99°X79° - 3000K CRI80 - ON/OFF - WHITE

LI-10022-T4-8030-ND-03

IP65 IK10



Product description

200x80 mm - 1000 mm - 1 side

Compatible with EN/ IEC 60598-2-22: Suitable for emergency installations as central supply, non-maintained (Z0)

Luminaire Structure

- Die-cast aluminium housing
- Extruded aluminium column
- Pre-treated before powder coating ensuring high corrosion resistance
- Single cable entry
- One IP68 connector supplied with 0.2 m of 3x1.0 sqmm outdoor cable
- Stainless steel fasteners in grade 304 with zinc flake coating (ZFC)
- Durable silicone rubber gasket
- Clear toughened glass
- High-efficiency PMMA lens
- Integral control gear

Optic



Product colour

- 03
White
RAL 9003

We reserve the right to make technical and design changes.

THAILAND
LIGMAN Lighting Co.,Ltd.
17/2 Moo 4, Monthong, Bang Nam Priao,
24150 Chachoengsao - Thailand
info@ligman.com

LIGHT LINEAR PT 1 - LI-10022 - 24 LED - 54 W - 99°X79° - 3000K CRI80 - ON/OFF - WHITE

LI-10022-T4-8030-ND-03

Technical information

Variant code	LI-10022-T4-8030-ND-03
Material	Aluminium
Light source	24 LED
Power	54 W
Lumen	5823 lm
Efficacy	108 lm/W
Driver option	Integral control gear
Driver	Constant current (CC)
Input voltage	220-240 V 50/60 Hz
Optic	T4
Optic value	99°x79°
CCT / CRI	3000K CRI80
BUG	B1-U0-G1

ULR	0%
ULOR	0%
CIE flux code n°3	97
Dimming type	On/Off
Product colours	White
Weight	11.8 kg
Operating temperature	-20 °C to 40 °C
Cable	One IP68 connector supplied with 0.2 m of 3x1.0 sqmm outdoor cable
Through wiring	Single cable entry
Lens / Reflector / Optic	Clear toughened glass, High-efficiency PMMA lens
MacAdam Ellipse	3 SDCM
Lifetime L90B10 (hours)	> 90,000
Lifetime L80B10 (hours)	> 90,000

Lifetime L80B50 (hours)	> 90,000
Compatible with EN/ IEC 60598-2-22: Suitable for emergency installations as central supply, non-maintained (Z0)	
This product contains a light source of energy efficiency class	C
Inrush current	65 A / 292 µs
Maximum number of luminaires of this variant per miniature circuit breaker:	
B 10A	4 luminaires
B 16A	6 luminaires
B 20A	8 luminaires
C 10A	7 luminaires
C 16A	11 luminaires
C 20A	14 luminaires

LI-10022

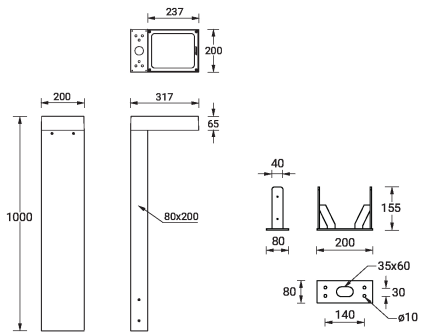

Isolux Diagram

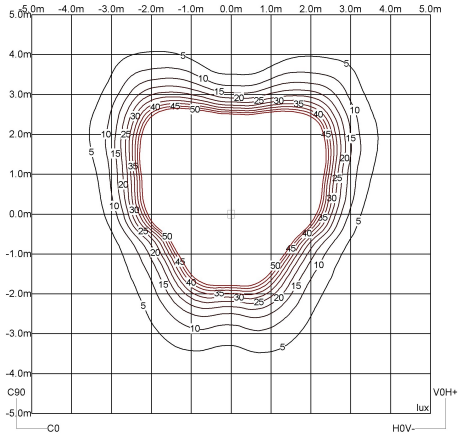

THAILAND
LIGMAN Lighting Co.,Ltd.
17/2 Moo 4, Monthong, Bang Nam Priao,
24150 Chachoengsao - Thailand
info@ligman.com

LIGHT LINEAR PT 1 - LI-10022 - 24 LED - 54 W - 99°X79° - 3000K CRI80 - ON/OFF - WHITE

LI-10022-T4-8030-ND-03

Accessory

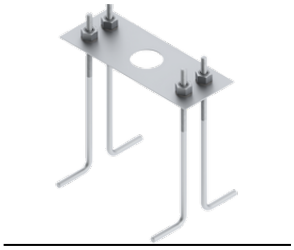

Anchor bolt
A11191

THAILAND
LIGMAN Lighting Co.,Ltd.
17/2 Moo 4, Monthong, Bang Nam Priao,
24150 Chachoengsao - Thailand
info@ligman.com