PLANOX

451243.009 | Luminaires for moist/humid environments



Ceiling and wall luminaires
4068754000789
L 1699, B 62, H 50

Ceiling mounting, pendant, Wall (surface)
grey

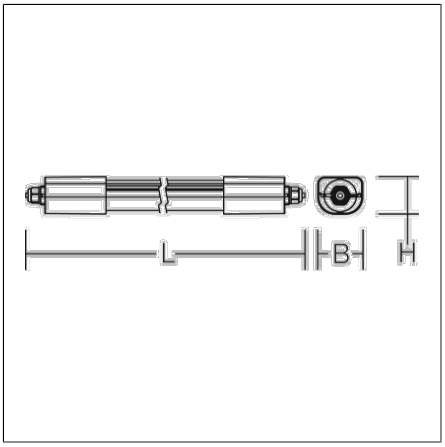

Moisture-proof luminaire with slim, flat housing. Side panels: plastic, grey polycarbonate, shockproof. Diffuser made of plastic (polycarbonate), opal, shockproof. Diffuser is extruded, prismatic inside and UV-resistant. Symmetrical light distribution. Homogeneous light distribution. Indirect light to illuminate the ceiling. Flexible installation thanks to sliding mounting brackets. Ideal for luminaire replacement. Ceiling mounting stainless steel brackets and triangular brackets for pendant mounting included in delivery. Luminaire with integrated 4-phase through-wiring to connect multiple luminaires. Cable screw fittings for convenient wiring. Easy installation thanks to removable plug-in connection and twist lock on both sides. LED unit with integrated converter interchangeable and removable. MultiLumen: 2 steps adjustable luminous flux. Factory-set to maximum luminous flux. Luminaire with limited surface temperature in accordance with EN 60598-2-24 for use in environments where conductive dust deposits on the luminaire can be expected. Suitable for use in the food and drinks industry.

Product specifications

Length L	**1699 mm**
Width B	**62 mm**
Height H	**50 mm**
Weight	**1.04 kg**
Light source	**LED**
Colour temperature	**4000 K**
Rated luminous flux	**4700 lm | 6800 lm**
System power	**31 W | 46 W**
System efficiency	**148 lm/W | 152 lm/W**
Glare evaluation RUG (4H 8H)	**24,6 | 25,9**
Beam angle	**down 165°/111°** **up 180°/98°**
LED rated life	**50000 h (L80/B10)** **100000 h (L70/B50)**
Colour rendering index (CRI)	**80**
Colour tolerance (McAdam)	**3 SDCM**
Photobiological safety according to EN 62471	**Risk group 0**
Driver	**Converter**
Control	**on/off**
Voltage	**220 - 240 V / 50 Hz, 60 Hz**
Luminaires on B10A fuse	**15**
Luminaires on B16A fuse	**24**
Luminaires on C10A fuse	**31**
Luminaires on C16A fuse	**49**
Inrush current / Inrush current duration	**45 A / 70 µs**
CIE Flux Code / CEN Flux Code	**37 66 87 79 100**
Type of protection	**IP 66**
Protection class	**II**
Filament test	**850 °C**
Impact resistance	**IK08**
Ambient temperature	**-30 °C to +50 °C**
Safety marks	**D-mark**
Conformity mark	**CE, EAC**

Accessories

672639.002
Emergency luminaire with M20 thread for area lighting



672638.002
Emergency luminaire with M20 thread for escape route lighting



982430.000
Mounting brackets made of stainless steel (theft protection) for ceiling and wall mounting.

Spareparts



982179.009
End piece for turn lock fastener.

PLANOX

451243.009 | Luminaires for moist/humid environments

