Kosnic

Kalem 3 Duo Dual-mode Manual-test & Self-test LED Emergency Exit Sign

Products Covered:
KAL02/SST
KAL02/SST-BLK

Please read these instructions thoroughly before use and retain for future reference.

- The Emergency Luminaire or Emergency Exit Sign is a surface mounted maintained or non-maintained luminaire supplied with adaptable self-adhesive graphics that can be arranged to indicate escape routes as necessary.
- The emergency luminaire is dual-mode Manual & Self-test, it is a stand-alone, self-contained emergency luminaire provided with manual mode as default requiring manual-testing.
- Self-test mode with localised automatic testing and reporting facilities requiring manual inspection to record the results is selected via the dual-mode DIP switch. The luminaire will perform an automatic weekly functional test and an annual full duration test at a random time during a 24 hours period, reporting any faults found with the battery or load.

Safety Information

- Installation must be carried out in accordance with national building and wiring regulations.
- If you are in any doubt about installing this product, please consult a qualified electrician.
- The LED module light source contained in this luminaire shall only be replaced by the manufacturer, service agent or a similar qualified person. **Dangerous voltage may be accessible with the diffuser removed.**
- Before commencing installation or servicing, turn off and isolate the circuit to be worked on by removing the fuse or switching the circuit breaker off at the distribution board.
- This product is suitable for connection to a 220-240Vac 50/60Hz supply.
- This is a **Class II**, **IP20** rated product and does not require an Earth though a terminal marked **E** is provided for Earth continuity.
- The emergency fitting is not suitable for use on a battery supply, trickle or intermittent re-charging circuit.
- The emergency fitting is not protected against supply voltage polarity reversal.
- When cutting holes, drilling or screwing take care not to damage existing wiring or pipework.
- Ensure appropriate personal protective equipment is used where required.
- Ensure that any batteries are disposed of appropriately, contact your local recycling authority for further information.

Installation Information

- Referring to the diagram supplied as below for wall installation.
- The luminaire can be used in both **maintained** mode (normal operation and emergency operation) or **non-maintained** mode (emergency operation only) according to the wiring as diagram below.
- Ensure that all electrical connections are tighten with no loose strands and secure any glands as necessary.
- **Ensure battery is connected.**
- Write the commissioning date on the battery label.
- Stick the Maintained or Non-Maintained emergency luminaire label on the luminaire where it can be seen.
- The battery leaves the factory in a charged state but may take up to 24 hours to fully charge for a 3-hour duration test. Charge for 5 minutes before performing a functional test to ensure there is some charge in the battery.
- To manually test the emergency function, the un-switched supply will need to be turned off.

Graphic Options

- The luminaire can be used with or without an exit sign graphic sheet. The graphic sheet is split into two parts, the arrow can be positioned as required.
- To remove a graphic sheet from the luminaire, use your fingers to pull down on the top edge of the graphic sheet until it curves and pops out of the top edge, then withdraw the lower edge.
- To fit an exit sign graphic, insert the lower edge into the gap at the base of the diffuser and then gently bend the graphic to fit the edge into the top gap.

Battery Replacement

- Turn off and isolate the circuit by removing the fuse or switching the circuit breaker off at the distribution board.
- Remove the luminaire from the mounting bracket.
- Disconnect the battery cable from the socket and remove the old battery.
- Write the commissioning date on the new battery label and connect the battery cable.
- Fit the luminaire to the mounting bracket and secure.
- Reconnect the supply.

At the end of product life, the product should be disconnected from the mains supply by a suitably qualified person and dismantled into its constituent parts prior to disposal. Only commonly available tools* such as screwdrivers, knives, soldering irons, spanners, pliers etc should be used and appropriate safety measures taken during their use. Parts such as LED strips, arrays, electrical control gear, PCBs, wiring, plastic diffusers, metal components such as back plates or heatsinks should all be separated from the product and disposed of via appropriate waste streams. Please consult your local authority for WEEE recycling and disposal options.
*List of commonly available tools is not exhaustive, if in any doubt please contact Kosnic.

Product and accessories included

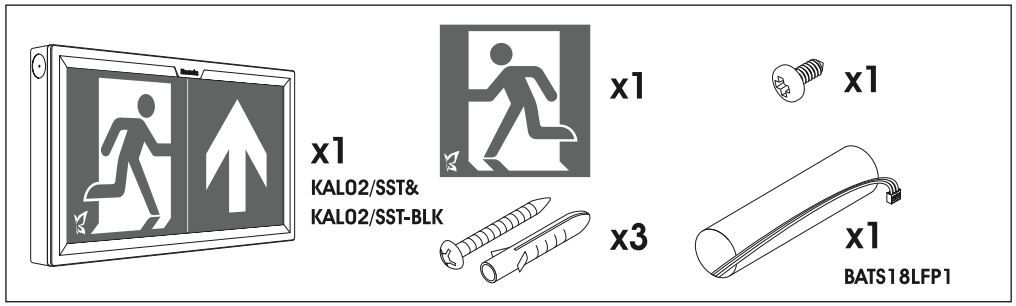

Installation Instruction / Instructions d'installation / Istruzoni di installazione

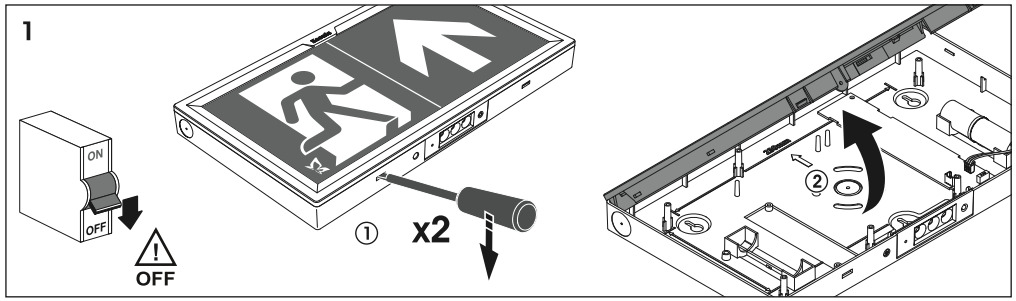

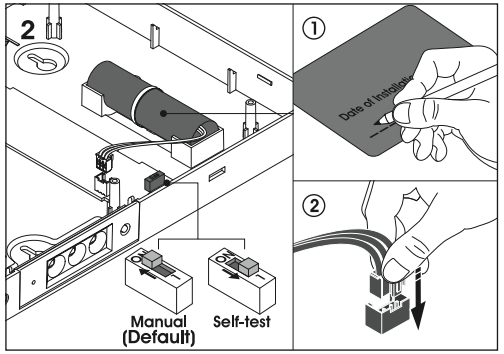

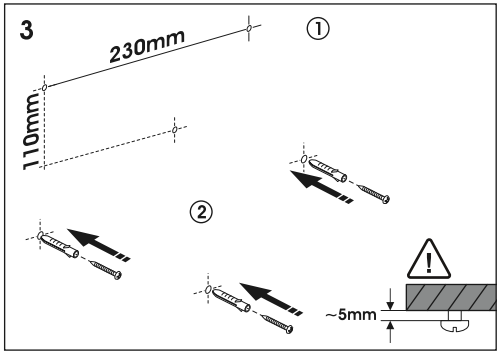

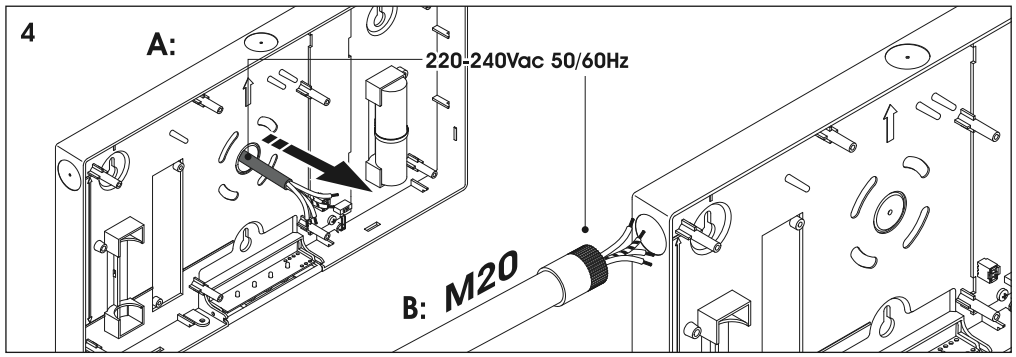

Kosnic

5

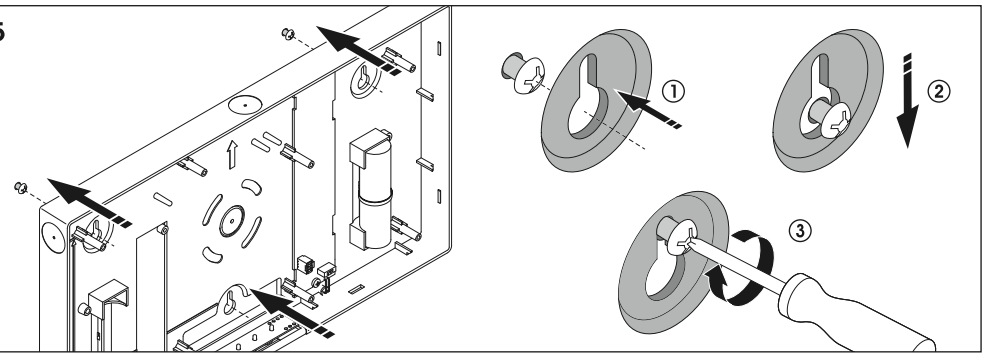

6

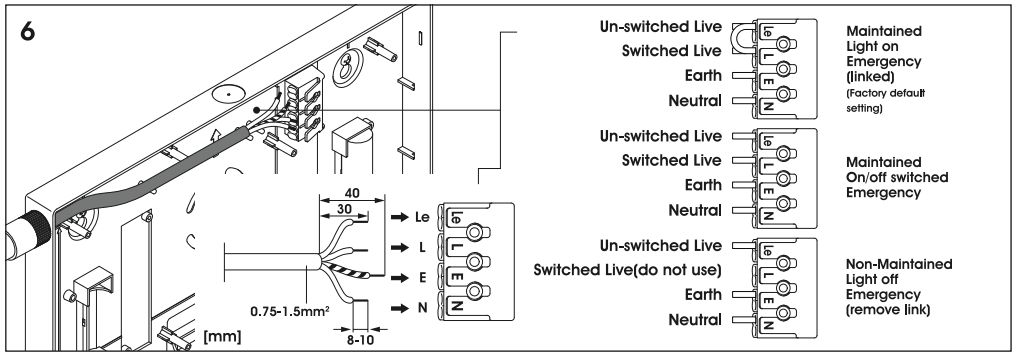

7

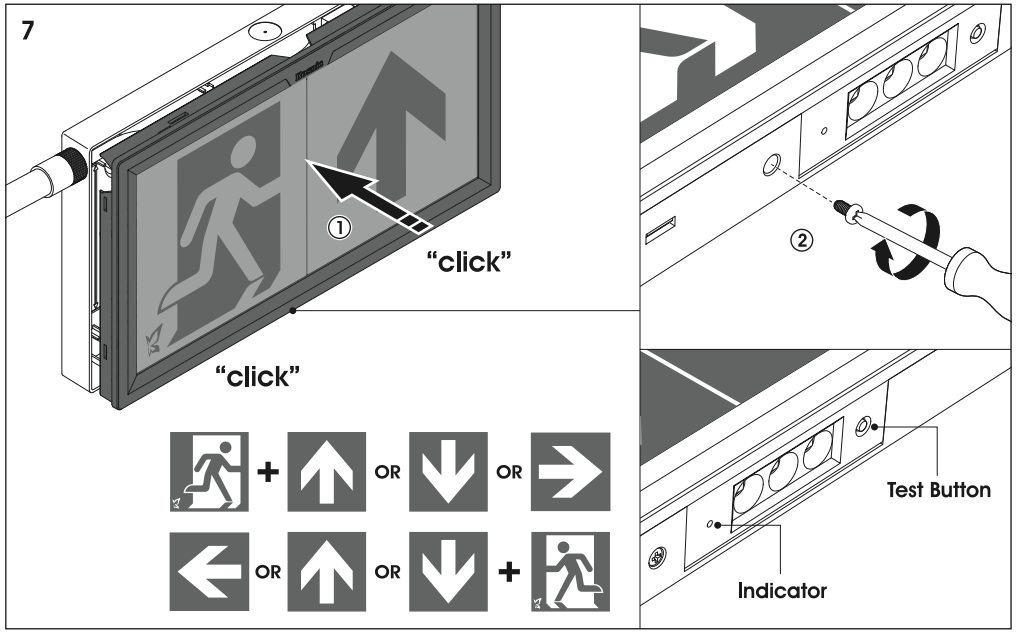

8

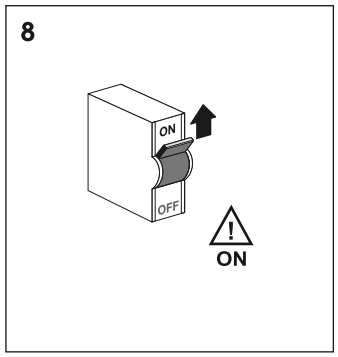

9

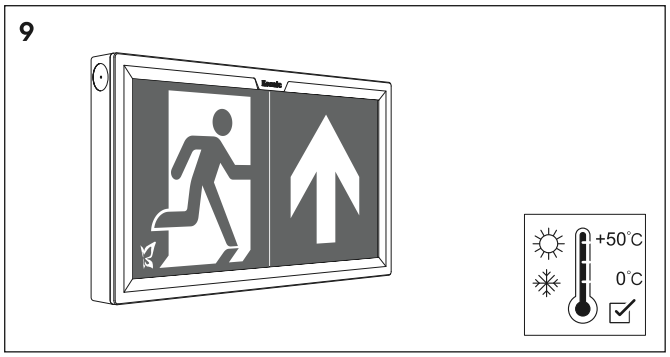

Battery Replacement / Remplacement de la batterie / Sostituzione della batteria

1 BATS18LFP1

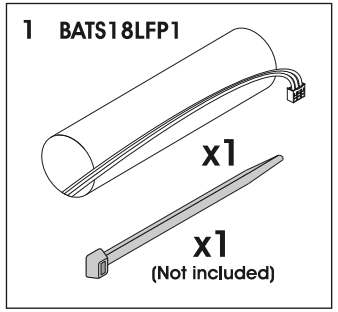

2

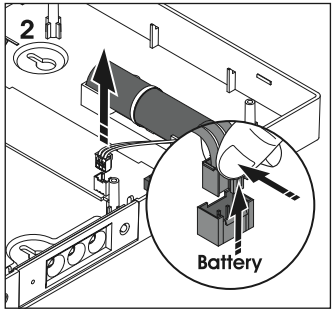

3

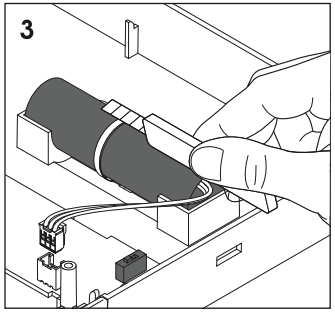

4

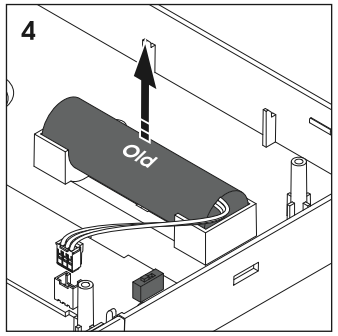

5

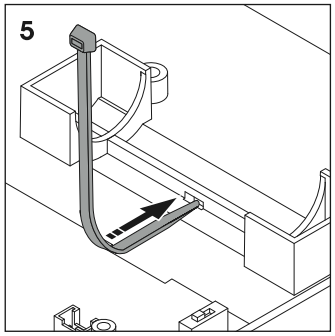

6

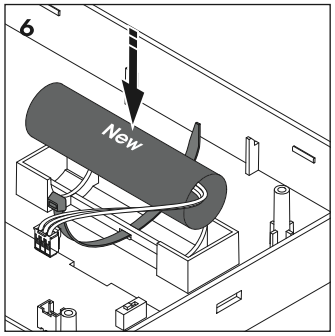

7

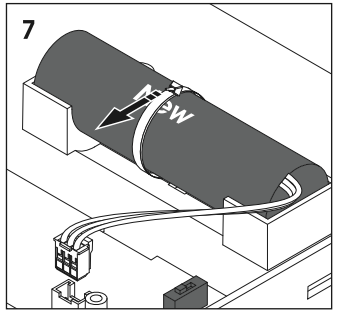

8

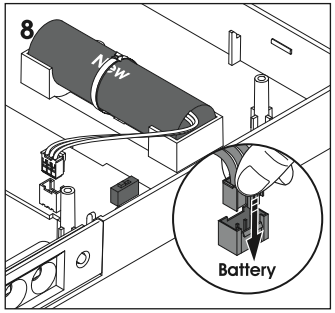

Kosnic

Self-Test Mode: Automatic / Manual Testing User Guide

Commissioning

- Commissioning takes place by connecting the battery and then the un-switched supply. The battery must be connected first.
- The green LED will immediately flash (2s on-0.5s off) to indicate the battery is charging then flash (0.5s on-0.5s off) to indicate that there is a pending duration test.
- A functional test will occur at 5 minutes after commissioning to allow 5 minutes for battery charging to ensure there is some charge in the battery.
- A duration test will occur at a random point between 24 hours and 48 hours after commissioning to allow 24 hours for battery charging.
- Any faults found in the functional and duration testing will be reported via the LED indicator, as detailed below.
- Disconnecting the un-switched supply and then the battery resets the emergency module, clears all fault reports and forces a re-commission when the battery and then the un-switched supply are reconnected.
- **If the un-switched supply of an emergency lighting circuit is switched OFF/ON twice within 5 seconds, the schedule for all the emergency units in the emergency lighting circuit is reset (to the current time).**

Duration Testing (3 hours)

- An automatic duration test will occur at a random point between 24 hours and 48 hours after commissioning to allow for battery charging.
- An automatic duration test will occur semi-annually or annually at a random point in the 26nd or 52nd week after commissioning.
- A duration test will occur once the battery is fully charged after triple-pressing the test button.
- A duration test may be delayed by other events, such as a power cut that interrupts the test or a lack of charging time, in which case the green LED will flash (0.5s on-0.5s off) to indicate there is a pending duration test that the emergency module has rescheduled.
- Any faults found in the duration testing will be reported via the LED indicator, as detailed below.
- A functional test will not override any faults reported by a duration test. A full duration test or re-commissioning is required to clear any faults.

Functional Testing (<2 minutes)

- A 5 seconds automatic functional test will occur at 5 minutes after commissioning.
- A 108 seconds automatic functional test will occur every 7 days.
- A manual 108 seconds functional test will start immediately after pressing the test button for 1-2 seconds.
- Any faults found in the functional testing will be reported via the LED indicator, as detailed below.
- A functional test will not override any faults reported by a duration test. A full duration test or re-commissioning is required to clear any faults.

Manual Testing

- Manual functional test: Press the test button for 1-2 seconds. A manual functional test lasting <2 minutes will start immediately.
- Manual duration test: Triple-press the test button. A manual duration test will occur once the battery is fully charged after triple-pressing the test button.

Pending Duration Testing

- A duration test may be delayed by other events, such as a power cut that interrupts the test or charging period, in which case the green LED will flash to indicate there is a pending duration test that the emergency module has rescheduled until charging is complete.

Manual Mode: Manual Testing User Guide

- The battery leaves the factory in a semi-charged state but may take up to 24 hours to fully charge for a 3-hour test. Charge for 5 minutes before performing a functional test to ensure there is some charge in the battery.
- A quick functional test can be performed by pressing the test button for 1-2 seconds.
- To fully test the emergency function, the un-switched supply will need to be turned off once the battery is fully charged with the green LED permanently on.
- Alternatively triple-press the test button. A manual duration test will occur once the battery is fully charged. A duration test may be delayed by a lack of charging time, in which case the green LED will flash (0.5s on-0.5s off) to indicate there is a pending duration test that the emergency module has rescheduled.
- Any faults found in the functional and duration test will be reported via the LED indicator, as detailed below.
- Disconnecting the un-switched supply and then the battery resets the emergency module, clears all fault reports when the battery and then the un-switched supply are reconnected.
- Replace the battery when the emergency module fails to meet the 3-hour duration requirement in testing. Triple-press the manual test button. A manual duration test will occur once the battery is fully charged.
- Replace or correct the fault with the lamp or luminaire, and then reconnect the supply. Press the manual test button for 1-2s seconds. A manual functional test lasting <2 minutes will start immediately.
- Check and reconnect the switched Live and un-switched Live if the LED indicator reported installation fault warning as detailed below.

Rest Mode

- Emergency operation is automatically started when the mains supply is switched off. Rest mode can be activated during emergency mode by doubling press the manual test button. The discharging of the battery will be minimized by switching off the LED output. The rest mode will be exited automatically after reconnect the supply.

Green LED Indicator Brightness Adjustment

- To adjust the brightness of the green LED indicator, press and hold the test button for more than 3 seconds, while continuing to hold the button, the indicator brightness will begin cycling through adjustable levels, release the button when your desired brightness is achieved, the selected brightness level will be automatically saved upon release.

Lamp or Luminaire Fault

- Turn off the supply and replace or correct the fault with the lamp or luminaire, and then reconnect the supply.
- Press the test button for 1-2 seconds. A manual functional test lasting <2 minutes will start immediately to clear the fault.
- Alternatively triple-pressing the test button. A manual duration test will occur once the battery is fully charged.
- If the battery and power have been disconnected the emergency module will re-commission and automatically test the replacement.
- A successful functional test will not override any faults reported by a duration test. A full duration test or re-commissioning is required to clear fault reports.

Battery Fault

- Turn off both the un-switched and switched supply and replace the battery, and then reconnect the supply.
- If the battery fault was due to the battery not being connected, both the un-switched and switched supply must off when connecting the battery to clear the battery fault.
- The emergency module will re-commission and so automatically test the replacement at a random point between 24 and 48 hours after commissioning to allow for battery charging.

Installation Fault Warning

Flashing Red & Green After Installation?

Don't worry — this is part of the system's self-check.

What to do:

Check the wiring.

- If it's wrong, turn off the switched and un-switched supply and connecting the wires to the correct terminals in the emergency module, and then reconnect the supply.
- If no wiring mistake, no action is needed. Wait 72 hours. The light will stop flashing. Still flashing after 72 hours? Then contact us.

LED Indicator (System status is locally indicated by a bi-coloured LED indicator)

LED Indicator (Continuous On, On, Flash, Off)	Description	Status	Manual Mode	Self-test Mode
	Green Permanently On	System Healthy	√	√
Off	Permanently Off	Emergency Mode	√	√
2 s / 2 s / 1/2 s	Green Slow Flash (2s on-0.5s off)	Battery Charging	√	√
1/2 s	Green Slow Flash (0.5s on-0.5s off)	Duration Test Pending	√	√
1/4 s	Green Medium Flash (0.25s on-0.25s off)	Duration Test Running	√	√
1/8 s	Green Fast Flash (0.125s on-0.125s off)	Functional Test Running	√	√
	Red Permanently On	Battery Charging Fault	√	√
1/4 s	Red Medium Flash (0.25s on-0.25s off)	Battery Duration Fault	√	√
1/8 s	Red Fast Flash (0.125s on-0.125s off)	Lamp or Luminaire Fault	√	√
5 s / 1 s / 1 s / 1 s	Green Stay On 5s Off 1s then Red On 1s Off 1s	Installation Fault Warning	√	√

Functionality of the test button

(The test button enables you to make a series of settings manually)

Actions on test button	Description	Function	Manual Mode	Self-test Mode
> 2s	Hold down	Green LED Indicator Brightness Adjustment	√	√
< 1s	Press <1s	Manual functional test (5s)	√	√
< 2s	Triple press <2s*	Manual duration test	√	√
< 1s	Double press <1s during emergency mode	Rest mode activated	√	√

*The green LED will flash for 1 second (0.125s on-0.125s off) to indicate a successful triple press.



The Waste Electrical & Electronic Equipment Regulations (WEEE) require that products bearing this symbol must not be disposed of with household waste as they may contain substances harmful to the environment. The Local Authority can provide advice on recycling.

Kosnic Lighting Ltd, Unit F, Kennetside, Bone Lane, Newbury, RG14 5PX, UK
Instruction LED Emergency Exit Sign Kalem 3 Duo KAL02.SST-xxx V1.0