kosnic.com

Doxa 2 Duo Dual-mode Manual & Self-test LED Emergency Exit Sign for Track Mount

Products Covered:
DOX20103-C3/SST
DOX20103-C3/SST-BLK

Please read these instructions thoroughly before use and retain for future reference.

- The Emergency Exit Sign is a maintained or non-maintained luminaire supplied with adaptable self-fitted graphics that can be arranged to indicate escape routes as necessary.
- The emergency module is dual-mode Manual & Self-test, it is a stand-alone, self-contained emergency module provided with manual mode as default requiring manual-testing.
- Self-test mode with localised automatic testing and reporting facilities requiring manual inspection to record the results is selected via the dual-mode DIP switch. The emergency module will perform an automatic weekly functional test and an annual or semi-annual full duration test at a random time during a 24 hours period, reporting any faults found with the battery or load. The emergency module is provided with annual duration test as default; semi-annual test is available via pressing the test button twice.

Safety Information

- Installation must be carried out in accordance with national building and wiring regulations.
- If you are in any doubt about installing this product, please consult a qualified electrician.
- Before commencing installation or servicing, turn off and isolate the circuit to be worked on by removing the fuse or switching the circuit breaker off at the distribution board.
- These instructions do not cover the installation of the track system. It is the user's responsibility to ensure the electrical and mechanical compatibility between the track system and the luminaires attached to it.
- Do not use solvents, glue, grease or oil-based products on the track system and fittings.
- This product is suitable for connection to a 220-240Vac 50/60Hz supply.
- This is a **Class II, IP20** rated product and does not have an earth connection.
- The emergency fitting is not suitable for use on a battery supply, trickle or intermittent re-charging circuit.
- The emergency fitting is not protected against supply voltage polarity reversal.
- The recharging device will recharge the battery normally after removal of a battery short-circuit.
- When cutting holes, drilling or screwing take care not to damage existing wiring or pipework.

Installation Information

- Referring to the diagram supplied as below for installation.
- The luminaire can be used in both maintained mode (normal operation and emergency operation) or non-maintained mode (emergency operation only) according to the wiring as diagram below.
- Ensure that all electrical connections are tighten with no loose strands and secure any glands as necessary.
- Ensure battery is connected.
- Write the commissioning date on the battery label.
- Stick the Maintained or Non-Maintained emergency luminaire label on the luminaire where it can be seen.
- The battery leaves the factory in a charged state but may take up to 24 hours to fully charge for a 3-hour duration test. Charge for 5 minutes before performing a functional test to ensure there is some charge in the battery.
- Manual testing can be initiated using the test button on the lower edge of the luminaire, see the following user guide for more information.
- A full unscheduled manual emergency test will require the un-switched supply to be turned off.

Battery Replacement

- Turn off and isolate the circuit by removing the fuse or switching the circuit breaker off at the distribution board.
- Unclip the luminaire from the mounting bracket, if necessary.
- Insert a small screwdriver into the slots on the sides to release the clips and separate the main body from the top cover.
- Disconnect the battery cable and remove the old battery.
- Write the commissioning date on the battery label and connect the grey and white battery cable to the socket on the end of the PCB.
- Replace the cover and reconnect the supply.

Kosnic Lighting Ltd, Unit F, Kennetside, Bone Lane, Newbury, RG14 5PX, UK
Kosnic Lighting France, 2bis Avenue Irene Joliot-Curie, 77700 Bailly-Romainvilliers, France

Installation Instruction / Instructions d'installation / Istruzoni di installazione

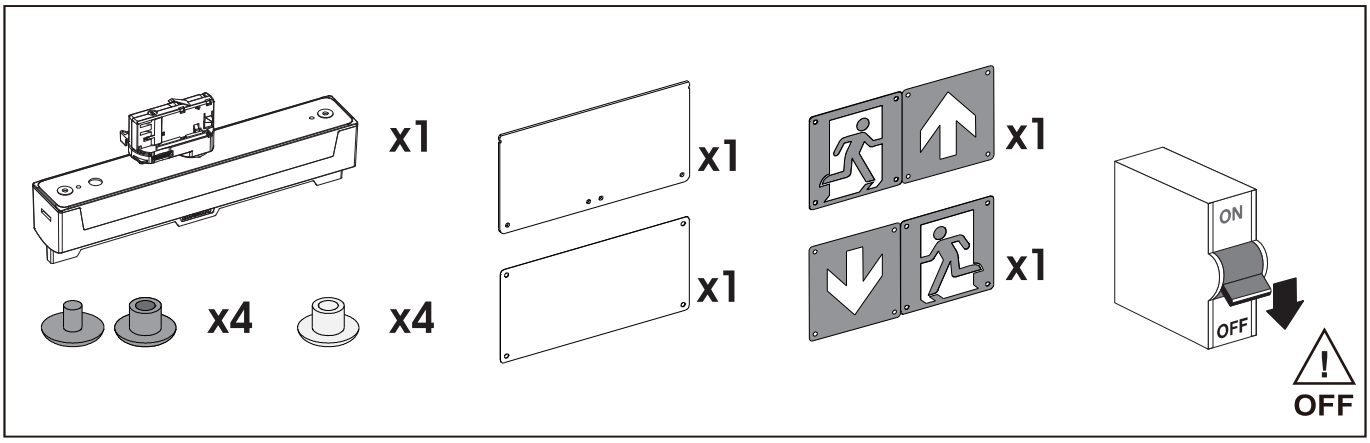

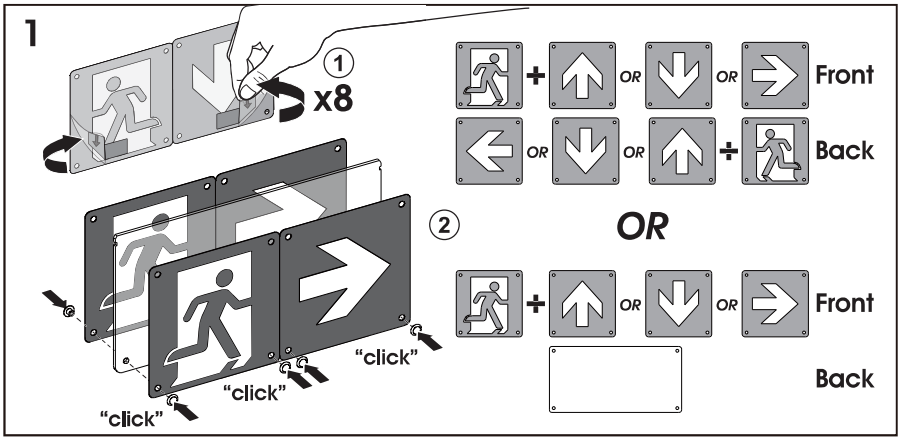

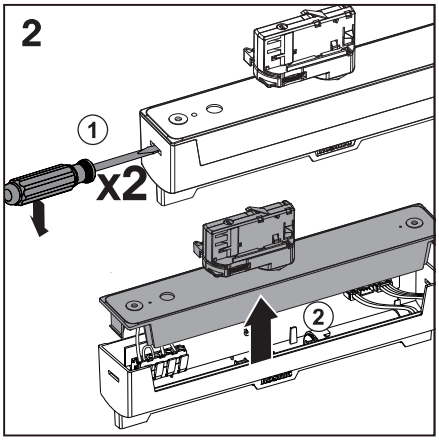

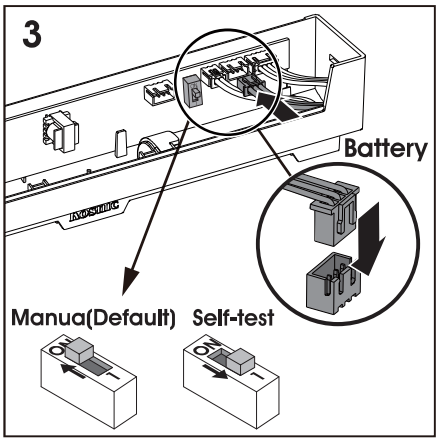

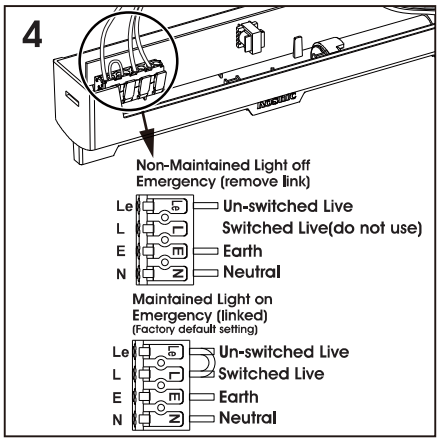

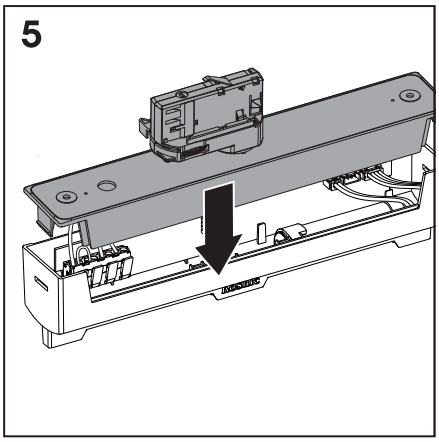

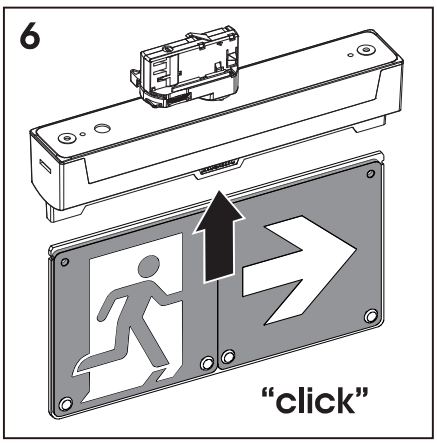

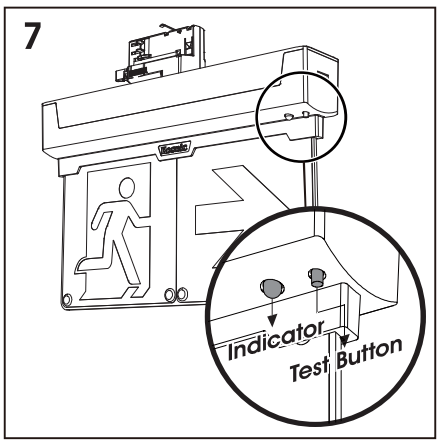

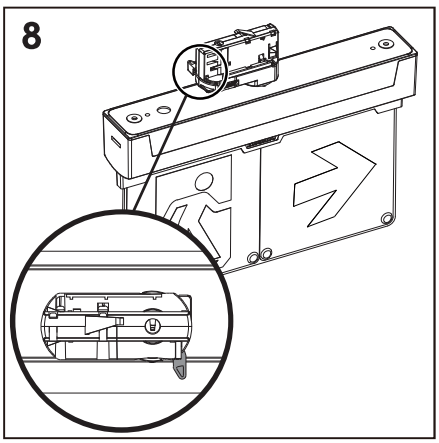

Kosnic Lighting Ltd, Unit F, Kennetside, Bone Lane, Newbury, RG14 5PX, UK
Kosnic Lighting France, 2bis Avenue Irene Joliot-Curie, 77700 Bailly-Romainvilliers, France

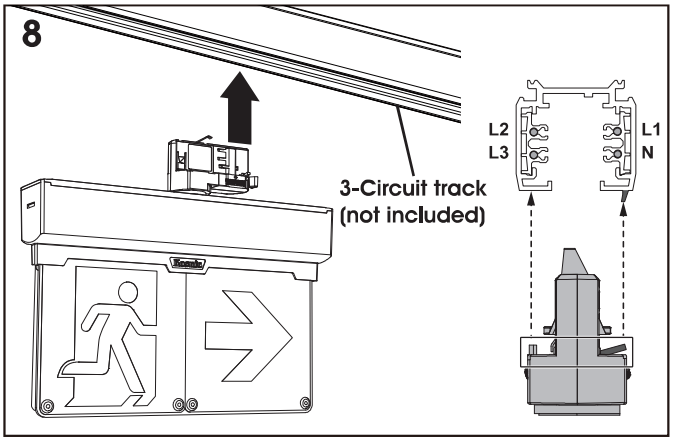

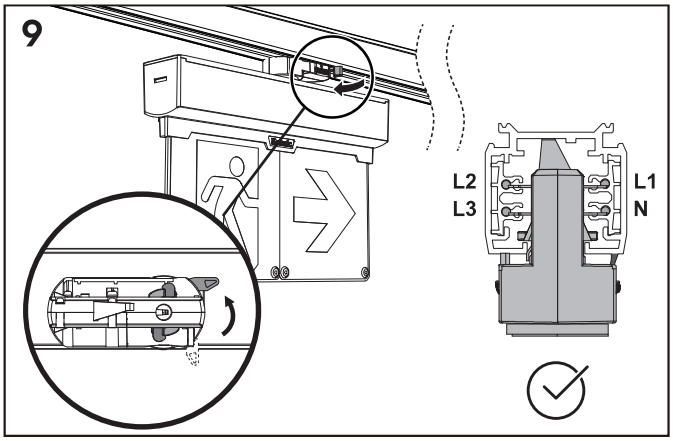

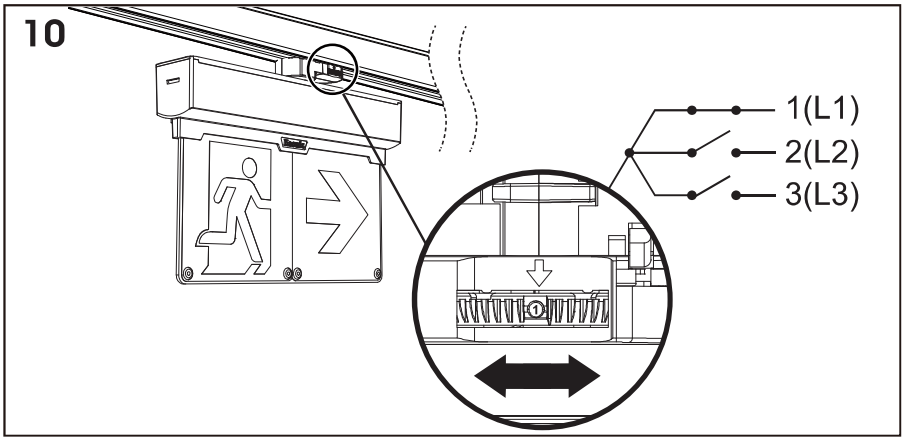

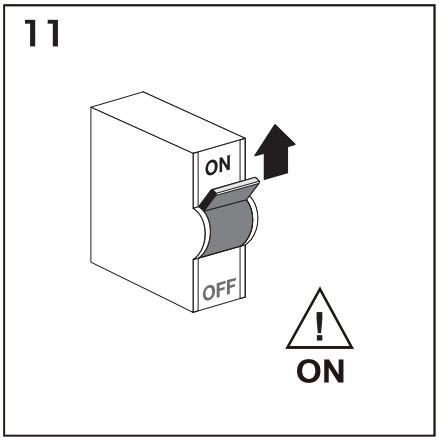

The Waste Electrical & Electronic Equipment Regulations (WEEE) require that products bearing this symbol must not be disposed of with household waste as they may contain substances harmful to the environment. The Local Authority can provide advice on recycling.

Kosnic Lighting Ltd, Unit F, Kennetside, Bone Lane, Newbury, RG14 5PX, UK
Kosnic Lighting France, 2bis Avenue Irene Joliot-Curie, 77700 Bailly-Romainvilliers, France

Self-Test Mode: Automatic / Manual Testing User Guide

Commissioning

- Commissioning takes place by connecting the battery and then the un-switched supply. The battery must be connected first.
- The green LED will immediately flash (2s on-0.5s off) to indicate the battery is charging then flash (0.5s on-0.5s off) to indicate that there is a pending duration test.
- A functional test will occur at 5 minutes after commissioning to allow 5 minutes for battery charging to ensure there is some charge in the battery.
- A duration test will occur at a random point between 24 hours and 48 hours after commissioning to allow 24 hours for battery charging.
- Any faults found in the functional and duration testing will be reported via the LED indicator, as detailed below.
- Disconnecting the un-switched supply and then the battery resets the emergency module, clears all fault reports and forces a re-commission when the battery and then the un-switched supply are reconnected.
- **If the un-switched supply of an emergency lighting circuit is switched OFF/ON twice within 5 seconds, the schedule for all the emergency units in the emergency lighting circuit is reset (to the current time).**

Duration Testing (3 hours)

- An automatic duration test will occur at a random point between 24 hours and 48 hours after commissioning to allow for battery charging.
- An automatic duration test will occur semi-annually or annually at a random point in the 26nd or 52nd week after commissioning.
- A duration test will occur once the battery is fully charged after triple-pressing the test button.
- A duration test may be delayed by other events, such as a power cut that interrupts the test or a lack of charging time, in which case the green LED will flash (0.5s on-0.5s off) to indicate there is a pending duration test that the emergency module has rescheduled.
- Any faults found in the duration testing will be reported via the LED indicator, as detailed below.
- A functional test will not override any faults reported by a duration test. A full duration test or re-commissioning is required to clear any faults.

Functional Testing (<2 minutes)

- A 5 seconds automatic functional test will occur at 5 minutes after commissioning.
- A 108 seconds automatic functional test will occur every 7 days.
- A manual 108 seconds functional test will start immediately after pressing the test button for 1-2 seconds.
- Any faults found in the functional testing will be reported via the LED indicator, as detailed below.
- A functional test will not override any faults reported by a duration test. A full duration test or re-commissioning is required to clear any faults.

Manual Testing

- Manual functional test: Press the test button for 1-2 seconds. A manual functional test lasting <2 minutes will start immediately.
- Manual duration test: Triple-press the test button. A manual duration test will occur once the battery is fully charged after triple-pressing the test button.

Pending Duration Testing

- A duration test may be delayed by other events, such as a power cut that interrupts the test or charging period, in which case the green LED will flash to indicate there is a pending duration test that the emergency module has rescheduled until charging is complete.

Lamp or Luminaire Fault

- Turn off the supply and replace or correct the fault with the lamp or luminaire, and then reconnect the supply.
- Press the test button for 1-2 seconds. A manual functional test lasting <2 minutes will start immediately to clear the fault.
- Alternatively triple-pressing the test button. A manual duration test will occur once the battery is fully charged.
- If the battery and power have been disconnected the emergency module will re-commission and automatically test the replacement.
- A successful functional test will not override any faults reported by a duration test. A full duration test or re-commissioning is required to clear fault reports.

Battery Fault

- Turn off both the un-switched and switched supply and replace the battery, and then reconnect the supply.
- If the battery fault was due to the battery not being connected, both the un-switched and switched supply must off when connecting the battery to clear the battery fault.
- The emergency module will re-commission and so automatically test the replacement at a random point between 24 and 48 hours after commissioning to allow for battery charging.

Installation Fault Warning

- Turn off the switched and un-switched supply and connecting the wires to the correct terminals in the emergency module, and then reconnect the supply.

Manual Testing User Guide

- The battery leaves the factory in a semi-charged state but may take up to 24 hours to fully charge for a 3-hour test. Charge for 5 minutes before performing a functional test to ensure there is some charge in the battery.
- A quick functional test can be performed by pressing the test button for 1-2 seconds.
- To fully test the emergency function, the un-switched supply will need to be turned off once the battery is fully charged with the green LED permanently on.
- Alternatively triple-press the test button. A manual duration test will occur once the battery is fully charged. A duration test may be delayed by a lack of charging time, in which case the green LED will flash (0.5s on-0.5s off) to indicate there is a pending duration test that the emergency module has rescheduled.
- Any faults found in the functional and duration test will be reported via the LED indicator, as detailed below.
- Disconnecting the un-switched supply and then the battery resets the emergency module, clears all fault reports when the battery and then the un-switched supply are reconnected.
- Replace the battery when the emergency module fails to meet the 3-hour duration requirement in testing. Triple-press the manual test button. A manual duration test will occur once the battery is fully charged.
- Replace or correct the fault with the lamp or luminaire, and then reconnect the supply. Press the manual test button for 1-2s seconds. A manual functional test lasting <2 minutes will start immediately.
- Check and reconnect the switched Live and un-switched Live if the LED indicator reported installation fault warning as detailed below.

Kosnic Lighting Ltd, Unit F, Kennetside, Bone Lane, Newbury, RG14 5PX, UK
Kosnic Lighting France, 2bis Avenue Irene Joliot-Curie, 77700 Bailly-Romainvilliers, France

Rest Mode

- Emergency operation is automatically started when the mains supply is switched off. Rest mode can be activated during emergency mode by doubling press the manual test button. The discharging of the battery will be minimized by switching off the LED output. The rest mode will be exited automatically after reconnect the supply.

Green LED Indicator Brightness Adjustment

- To adjust the brightness of the green LED indicator, press and hold the test button for more than 3 seconds, while continuing to hold the button, the indicator brightness will begin cycling through adjustable levels, release the button when your desired brightness is achieved, the selected brightness level will be automatically saved upon release.

LED Indicator (System status is locally indicated by a bi-coloured LED indicator)

LED Indicator (Continuous On, On, Flash, Off)	Description	Status	Manual Mode	Self-test Mode
	Green Permanently On	System Healthy	√	√
Off	Permanently Off	Emergency Mode	√	√
2 s, 2 s, 1/2 s	Green Slow Flash (2s on-0.5s off)	Battery Charging	√	√
1/2 s	Green Slow Flash (0.5s on-0.5s off)	Duration Test Pending	√	√
1/4 s	Green Medium Flash (0.25s on-0.25s off)	Duration Test Running	√	√
1/8 s	Green Fast Flash (0.125s on-0.125s off)	Functional Test Running	√	√
	Red Permanently On	Battery Charging Fault	√	√
1/4 s	Red Medium Flash (0.25s on-0.25s off)	Battery Duration Fault	√	√
1/8 s	Red Fast Flash (0.125s on-0.125s off)	Lamp or Luminaire Fault	√	√
5 s, 1 s, 1 s, 1 s	Green Stay On 5s Off 1s then Red On 1s Off 1s	Installation Fault Warning	√	√
5 s	Off 1s then Red Stay On 5s	26 Weeks Duration Test Interval	N/A	√
1/8 s flash for 5 s	Off 1s then Red Fast Flash 5s (0.125s on-0.125s off)	52 Weeks Duration Test Interval	N/A	√

Functionality of the test button (The test button enables you to make a series of settings manually)

Actions on test button	Description	Function	Manual Mode	Self-test Mode
TEST > 3s	Hold down	Green LED Indicator Brightness Adjustment	√	√
TEST < 1s	Press <1s	Confirm the current duration test interval and 1s functional test	N/A	√
TEST < 1s	Double press <1s	Set the duration test interval	N/A	√
TEST 1-2s	Press 1-2s	Manual functional test	√	√
TEST < 2s	Triple press <2s	Manual duration test	√	√
TEST < 1s	Double press <1s during emergency mode	Rest mode activated	√	√

Kosnic Lighting Ltd, Unit F, Kennetside, Bone Lane, Newbury, RG14 5PX, UK
Kosnic Lighting France, 2bis Avenue Irene Joliot-Curie, 77700 Bailly-Romainvilliers, France