7 Years
Product Warranty
UK Only

2 Years
On-Site Warranty
Main-land UK Only

Doxa 2

08027 DOX20103-C3/SST

Doxa 2 Duo Emergency exit sign Manual & Self-test Track mount

- Select manual or self-test mode via the internal dual-mode DIP switch
- Automatic Self-test conforming to BS-EN62034
- To adjust green LED indicator brightness, press and hold the test button for more than 2 seconds
- 7 mounting positions
- Integrated mounting clips
- Maintained or non-maintained operation
- 3 circuit track-mount version available







Overview

The Kosnic Doxa emergency exit sign is a self-contained, multi-purpose, maintained or non-maintained 3-hour emergency exit sign solution. The fitting is adaptable to be surface mounted in multiple positions. Also, available in self-test version.

IP20

General Information

IP Rating	IP20
Installation Area	Internal
UEM/EME Protection	Class II
L80B10 Lifetime (h) @Ta 25 °C	109,000 h

Compliance

LVD	EN 60598-1:2024, EN 60598-2-22:2022, EN 62031:2020, EN 62471:2008, EN 62493:2015+A1:2022
EMC	EN 55015:2019+A11:2020, EN 61000-3-2:2019+A1:2021, EN 61000-3-3:2013+A1:2019+A2:2021, EN 61547:2023
Others	UKCA, CE, RoHS, WEEE, REACH

Technical Summary	
Product Code	DOX20103-C3/SST
Lumens Output Maximum	30 lm
Emergency Luminous Flux	30 lm
Maintained Luminous Flux	50 lm
L80B10 Lifetime (h) @Ta 25 °C	109,000 h
UEM/EME Battery Life	5 y
UEM/EME Input Voltage	220-240Vac 50/60Hz
UEM/EME Ambient Temperature Range	0°C to 50°C
UEM/EME Power Factor	0.5
UEM/EME CCT	6,500 K
UEM/EME Input Power (Max)	3 W
UEM/EME Protection	Class II
UEM/EME Weight	0.735 kg
UEM/EME Dimensions (L x W x D) (mm)	172.5x264x45
UEM/EME Emergency Operation Test	Dual-mode Standard & Self-Test (ATS Type S)

Tel: 01635 523 713

Email: sales@kosnic.com

Kosnic.com

Kosnic Lighting KosnicUK KosnicLightingUK

7 Years
Product Warranty
UK Only

2 Years
On-Site Warranty
Main-land UK Only

Doxa 2

08027 DOX20103-C3/SST

Accessories

Product Code	Description	Type
BAT18LFP1	Battery for Kosnic Emergencies	Battery

Overview

The Kosnic Doxa emergency exit sign is a self-contained, multi-purpose, maintained or non-maintained 3-hour emergency exit sign solution. The fitting is adaptable to be surface mounted in multiple positions. Also, available in self-test version.

IP20

General Information

IP Rating	IP20
Installation Area	Internal
UEM/EME Protection	Class II

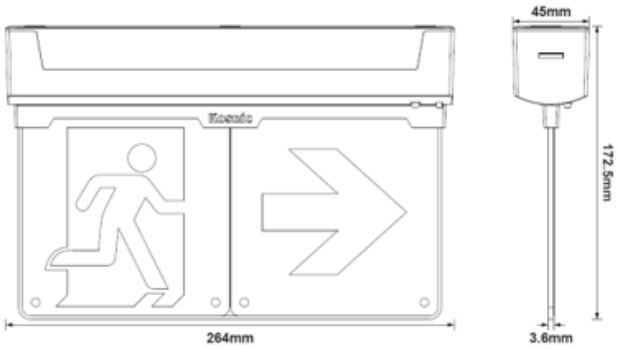



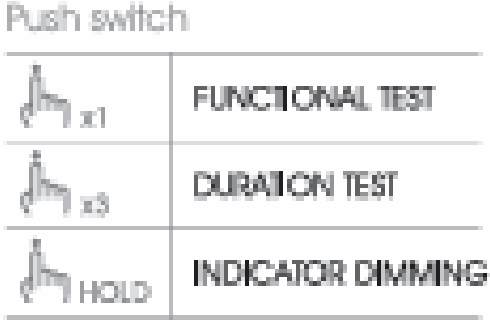

Tel: 01635 523 713
Email: sales@kosnic.com
Kosnic.com
Kosnic Lighting KosnicUK KosnicLightingUK KosnicUK