5 Years
Product Warranty
UK Only

2 Years
On-Site Warranty
Main-land UK Only

Doxa 2

08051 DOX20103/ST

Doxa 2 Emergency exit sign 3W Self-test Surface/Recessed mount

- 7 mounting positions
- Maintained or non-maintained operation
- Integrated mounting clips
- Self-test model according to BS-EN-62034-2012







Overview

The Kosnic Doxa emergency exit sign is a self-contained, multi-purpose, maintained or non-maintained 3-hour emergency exit sign solution. The fitting is adaptable to be surface mounted in multiple positions. Also, available in self-test version.

IP20

General Information

IP Rating	IP20
Installation Area	Internal
UEM/EME Protection	Class II

Technical Summary	
Product Code	DOX20103/ST
Lumens Output Maximum	30 lm
Emergency Luminous Flux	30 lm
Maintained Luminous Flux	50 lm
UEM/EME Battery Life	4 y
UEM/EME Input Voltage	220-240Vac 50/60Hz
UEM/EME Ambient Temperature Range	0°C to 40°C
UEM/EME Power Factor	0.5
UEM/EME CCT	6,500 K
UEM/EME Input Power (Max)	3 W
UEM/EME Protection	Class II
UEM/EME Weight	0.735 kg
UEM/EME Dimensions (L x W x D) (mm)	172.5x264x45
UEM/EME Emergency Operation Test	Self-Test (ATS Type S)

Compliance

LVD	EN 60598-1:2024, EN 60598-2-22:2022, EN 62031:2020, EN 62471:2008, EN 62493:2015+A1:2022
EMC	EN 55015:2019+A11:2020, EN 61000-3-2:2019+A1:2021, EN 61000-3-3:2013+A1:2019+A2:2021, EN 61547:2023
Others	UKCA, CE, RoHS, WEEE, REACH

Tel: 01635 523 713

Email: sales@kosnic.com

Kosnic.com

Kosnic Lighting KosnicUK KosnicLightingUK

5 Years
Product Warranty
UK Only

2 Years
On-Site Warranty
Main-land UK Only

Doxa 2

08051 DOX20103/ST

Accessories

Product Code	Description	Type
BAT18LFP1	Battery for Kosnic Emergencies	Battery

Overview

The Kosnic Doxa emergency exit sign is a self-contained, multi-purpose, maintained or non-maintained 3-hour emergency exit sign solution. The fitting is adaptable to be surface mounted in multiple positions. Also, available in self-test version.

IP20

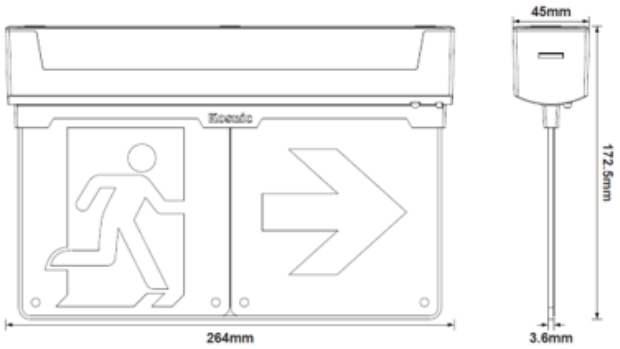

General Information

IP Rating	IP20
Installation Area	Internal
UEM/EME Protection	Class II

Tel: 01635 523 713
Email: sales@kosnic.com
Kosnic.com
Kosnic Lighting KosnicUK KosnicLightingUK KosnicUK