www.kosnic.com

Automatic Self-Test Doxa II LED Emergency Exit Sign(ATS type S)

Please read these instructions thoroughly before use and retain for future reference.

Products covered:

DOX20103/ST

- The Emergency Exit Sign is a maintained or non-maintained luminaire supplied with adaptable self-fitted graphics that can be arranged to indicate escape routes as necessary for suspension, wall or ceiling mounting.
- This emergency luminaire is classified as **ATS type S**. This is a stand-alone, self-contained emergency luminaire with localised automatic testing and reporting facilities requiring manual inspection to record the results.
- The emergency luminaire will perform an automatic weekly functional test and an annual full duration test at a random time during a 24-hour period, reporting any faults found with the battery or load.

Safety Information

- Installation must be carried out in accordance with national building and wiring regulations.
- If you are in any doubt about installing this product, please consult a qualified electrician.
- Before commencing installation or servicing, turn off and isolate the circuit to be worked on by removing the fuse or switching the circuit breaker off at the distribution board.
- This product is suitable for connection to a 220-240Vac 50/60Hz supply.
- This is a **Class II, IP20** rated product and does not have an earth connection.
- The emergency fitting is not suitable for use on a battery supply, trickle or intermittent re-charging circuit.
- The emergency fitting is not protected against supply voltage polarity reversal.
- The recharging device will recharge the battery normally after removal of a battery short-circuit.
- When cutting holes, drilling or screwing take care not to damage existing wiring or pipework.

Installation Information

- Referring to the diagram supplied as below for installation.
- The luminaire can be used in both **maintained** mode (normal operation and emergency operation) or **non-maintained** mode (emergency operation only) according to the wiring as diagram below.
- Ensure that all electrical connections are tighten with no loose strands and secure any glands as necessary.
- **Ensure battery is connected.**
- Write the commissioning date on the battery label.
- Stick the Maintained or Non-Maintained emergency luminaire label on the luminaire where it can be seen.
- The battery leaves the factory in a charged state but may take up to 24 hours to fully charge for a 3-hour duration test. Charge for 5 minutes before performing a functional test to ensure there is some charge in the battery.
- Manual testing can be initiated using the test button on the lower edge of the luminaire, see the following user guide for more information.
- A full unscheduled manual emergency test will require the un-switched supply to be turned off.

Battery Replacement

- Turn off and isolate the circuit by removing the fuse or switching the circuit breaker off at the distribution board.
- Unclip the luminaire from the mounting bracket, if necessary.
- Insert a small screwdriver into the slots on the sides to release the clips and separate the main body from the top cover.
- Disconnect the battery cable and remove the old battery.
- Write the commissioning date on the battery label and connect the grey and white battery cable to the socket on the end of the PCB.
- Replace the cover and reconnect the supply.

Kosnic Lighting Ltd, Unit 2, Kennetside, Bone Lane, Newbury, RG14 5PX, UK
Kosnic Lighting France, 2bis Avenue Irene Joliot-Curie, 77700 Bailly-Romainvilliers, France

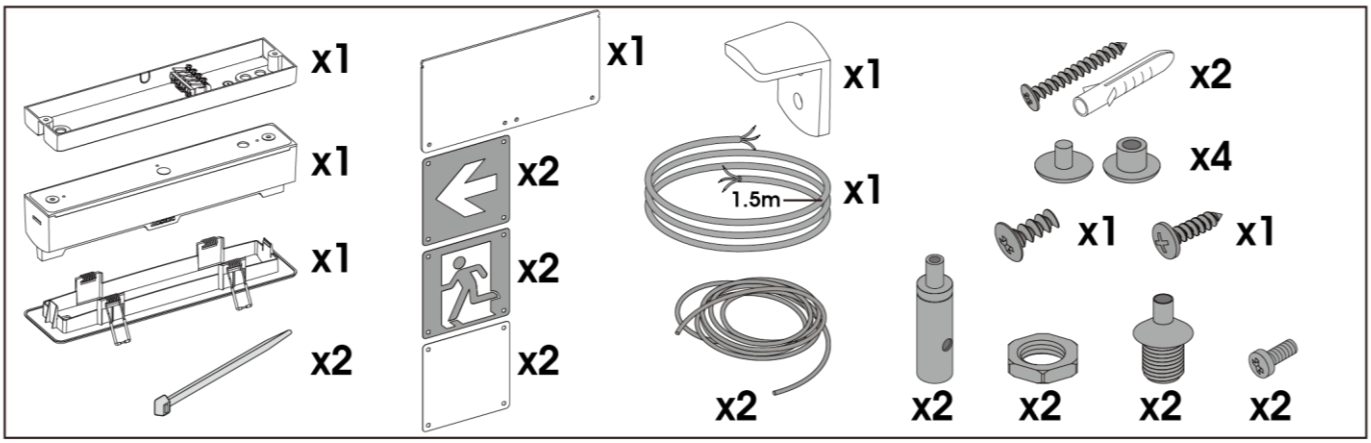

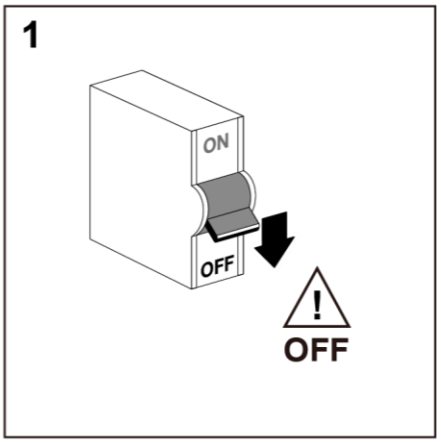

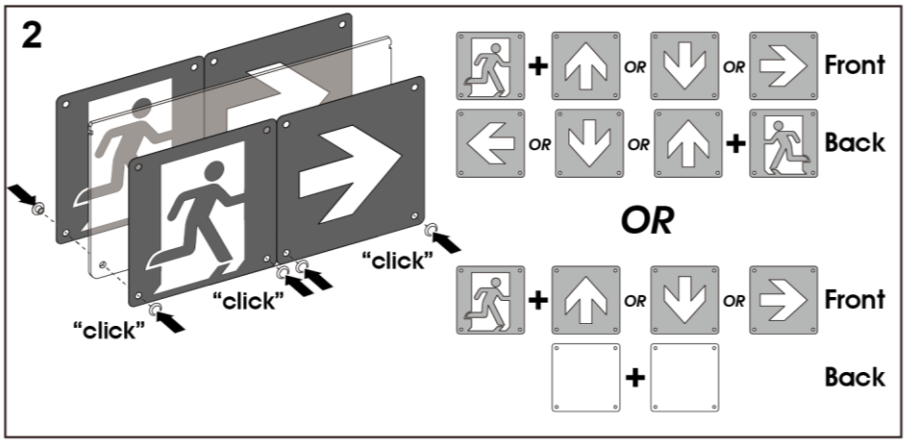

A.Suspended mount

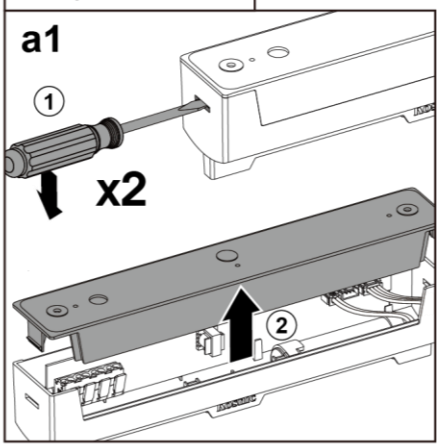

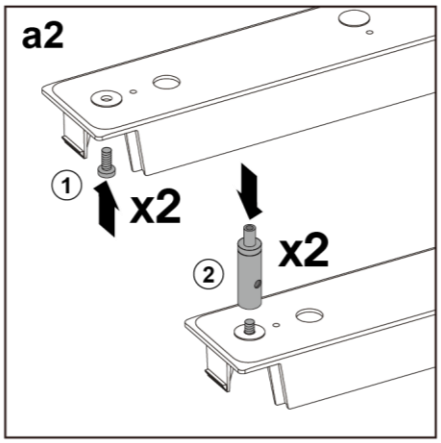

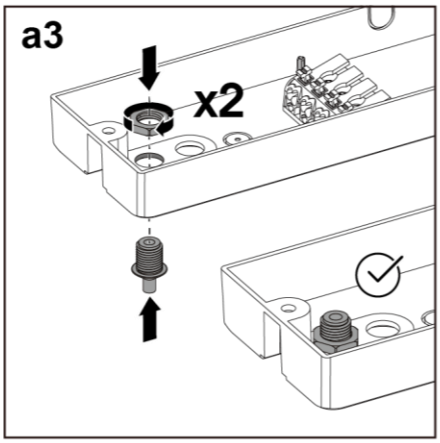

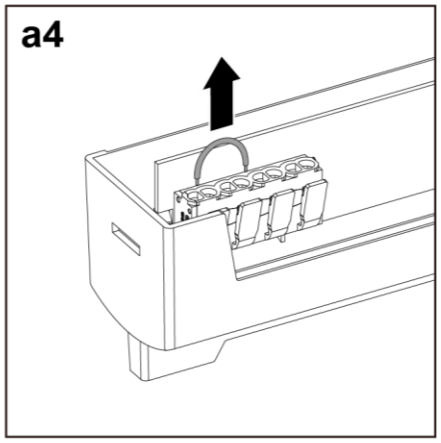

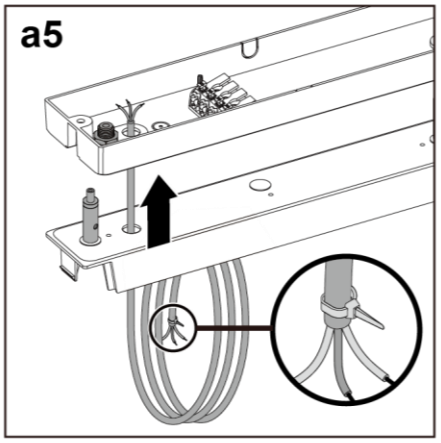

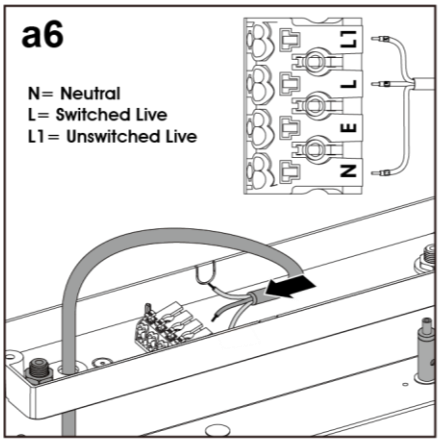

Kosnic Lighting Ltd, Unit 2, Kennetside, Bone Lane, Newbury, RG14 5PX, UK
Kosnic Lighting France, 2bis Avenue Irene Joliot-Curie, 77700 Bailly-Romainvilliers, France

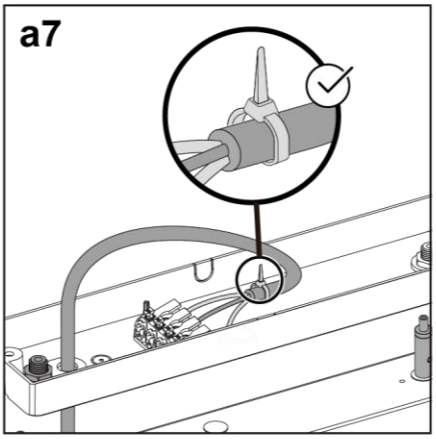

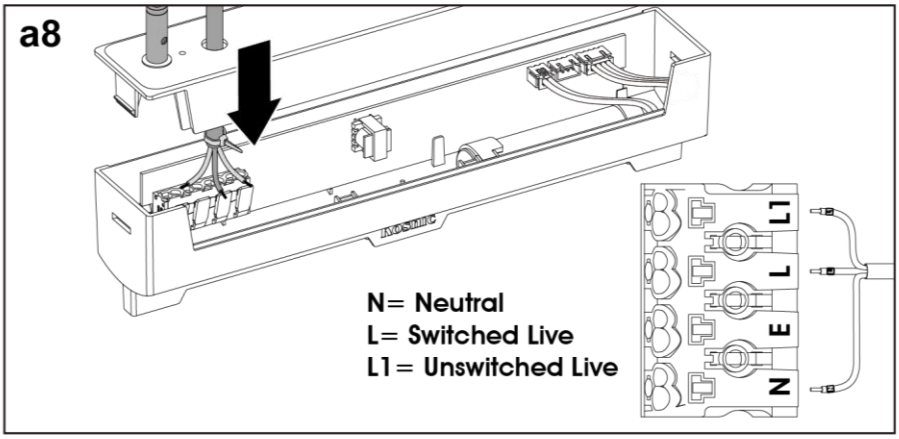

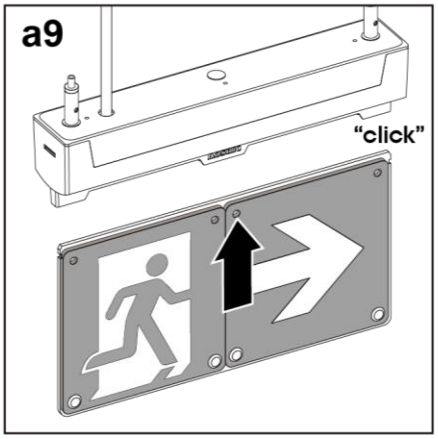

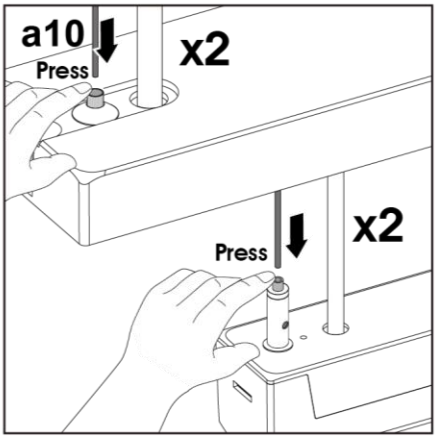

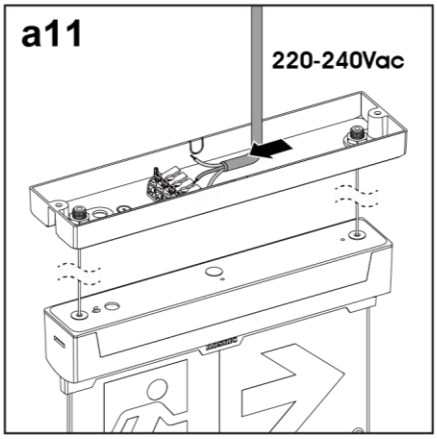

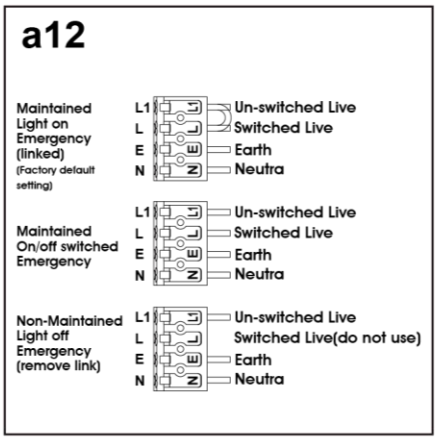

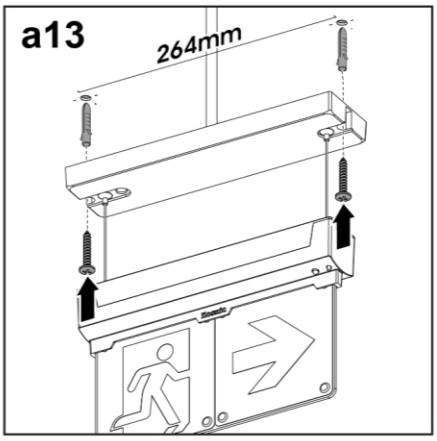

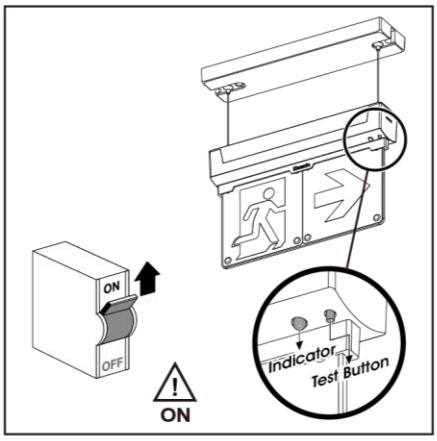

B.Surface mount

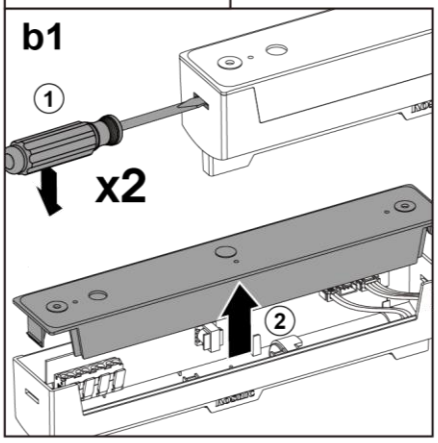

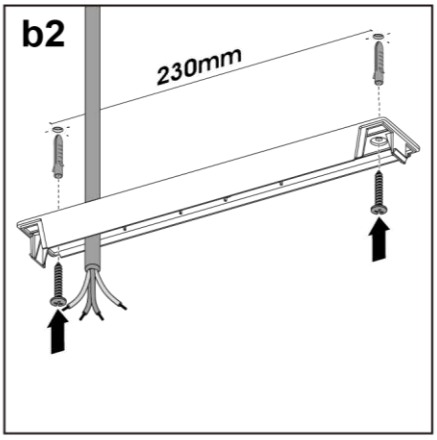

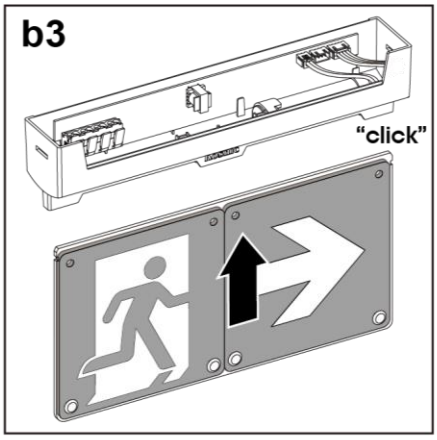

Kosnic Lighting Ltd, Unit 2, Kennetside, Bone Lane, Newbury, RG14 5PX, UK
Kosnic Lighting France, 2bis Avenue Irene Joliot-Curie, 77700 Bailly-Romainvilliers, France

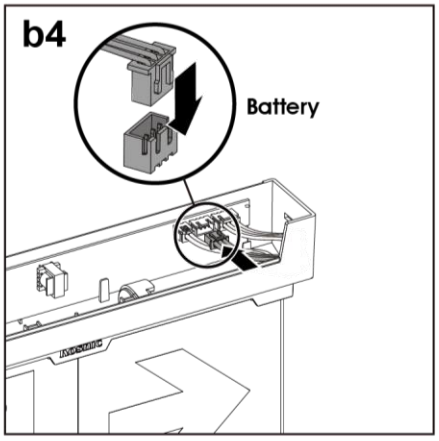

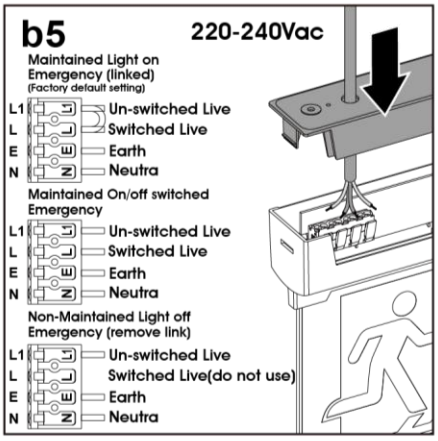

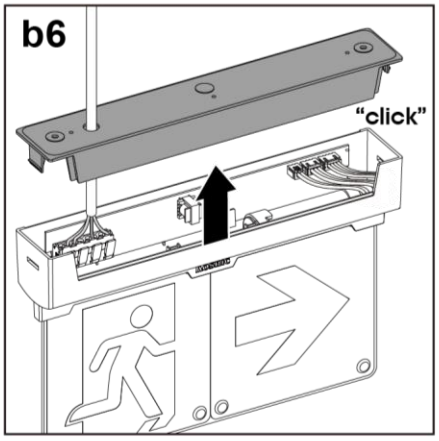

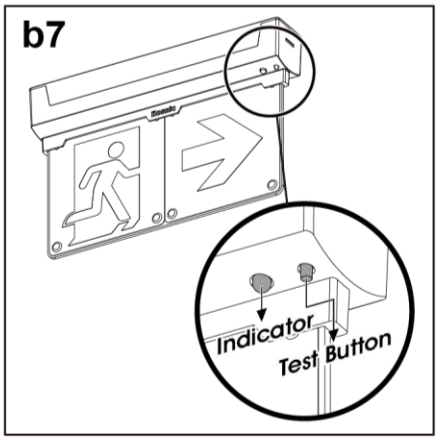

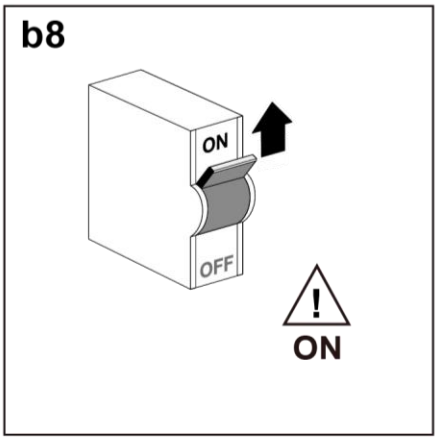

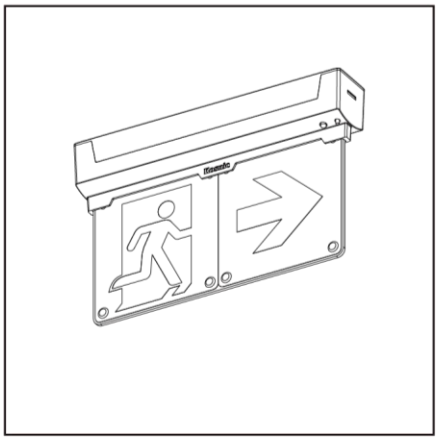

C.Side Wall-mount

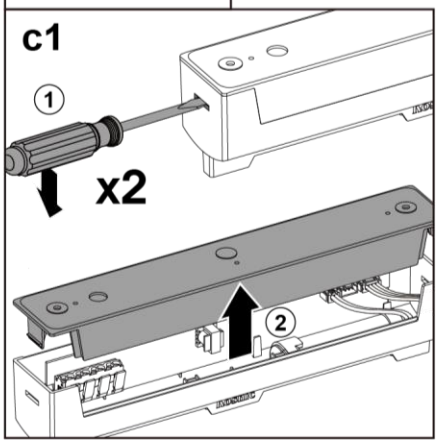

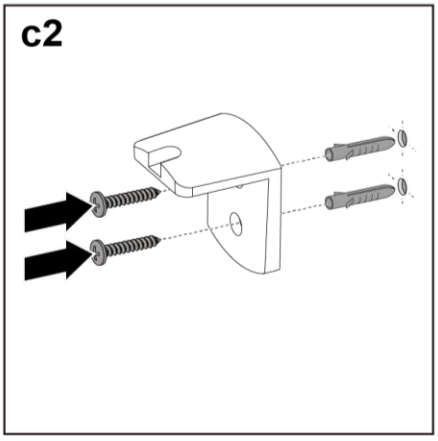

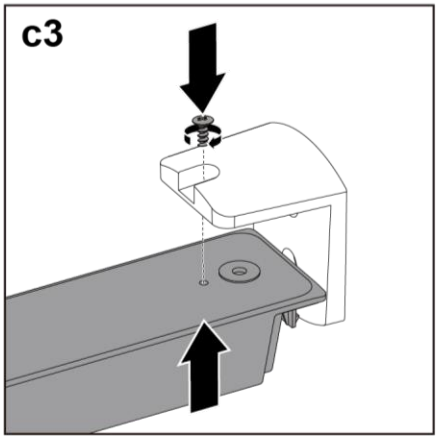

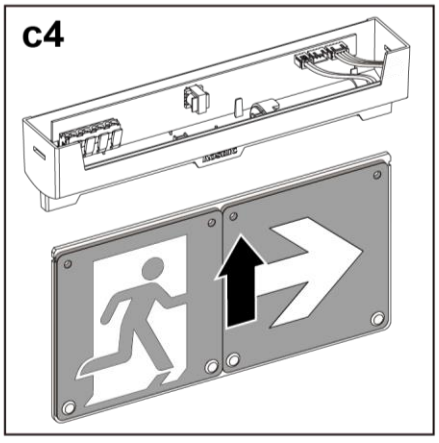

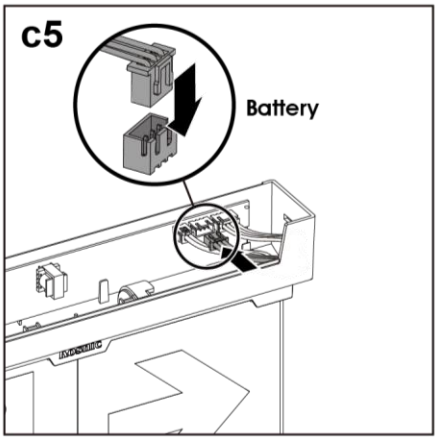

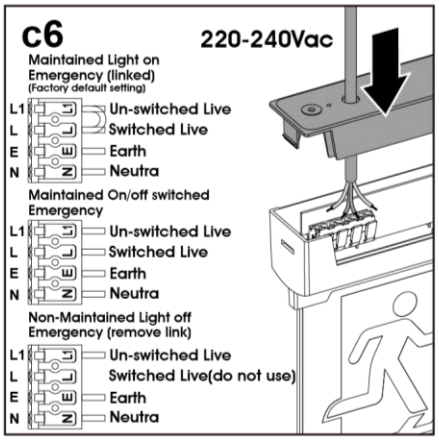

Kosnic Lighting Ltd, Unit 2, Kennetside, Bone Lane, Newbury, RG14 5PX, UK
Kosnic Lighting France, 2bis Avenue Irene Joliot-Curie, 77700 Bailly-Romainvilliers, France

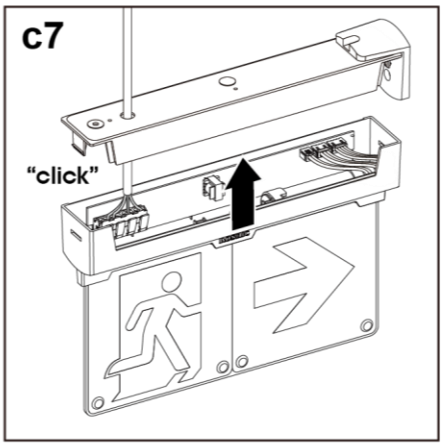

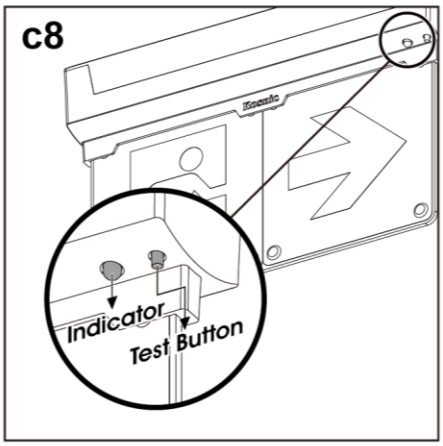

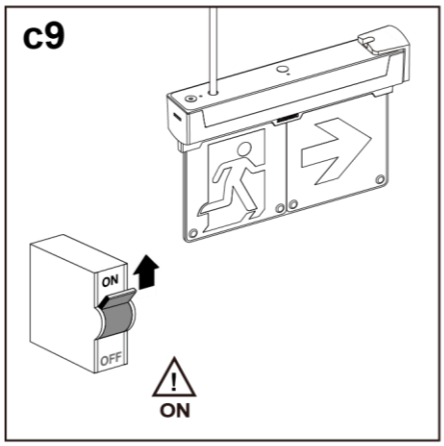

D.Wall-mount

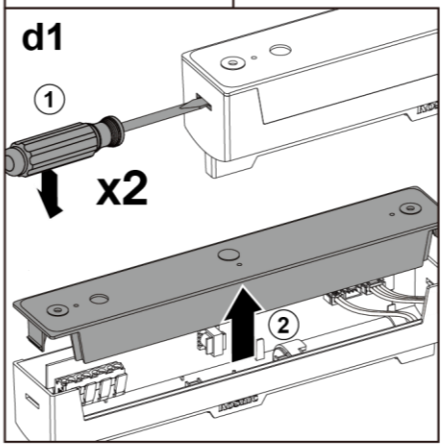

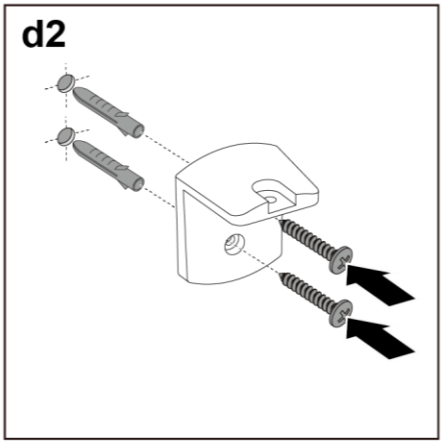

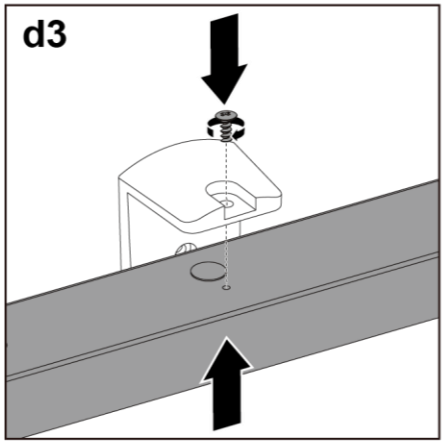

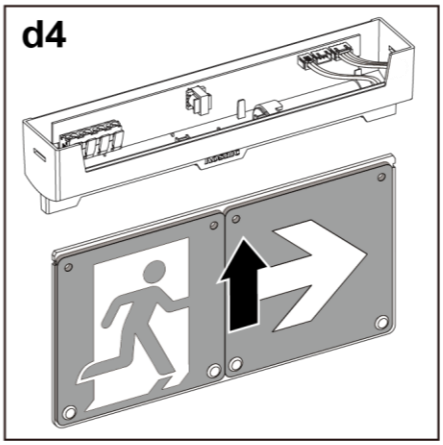

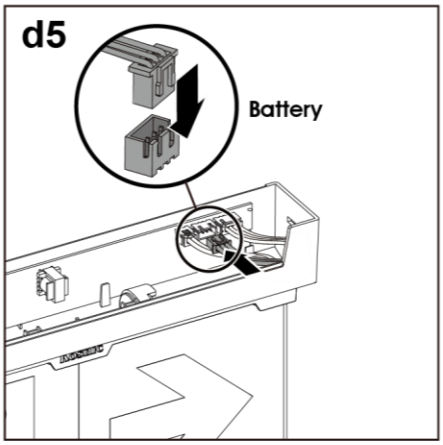

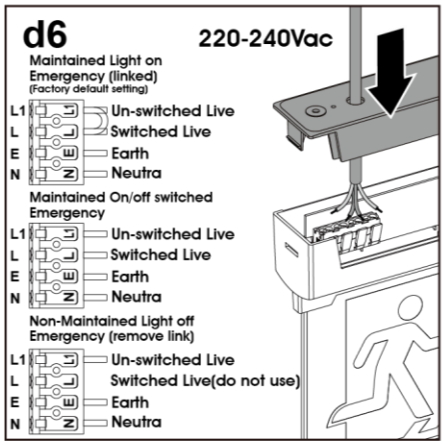

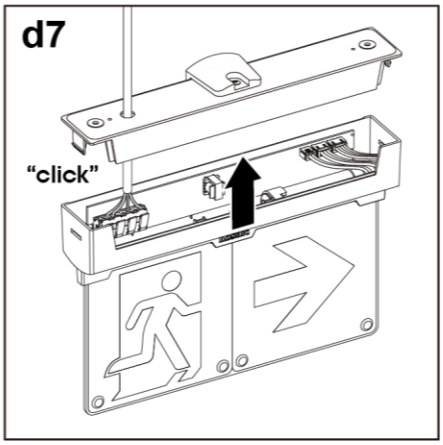

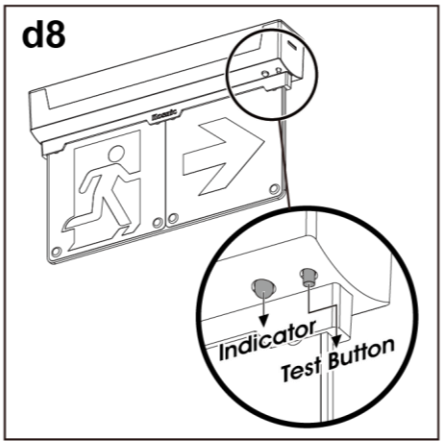

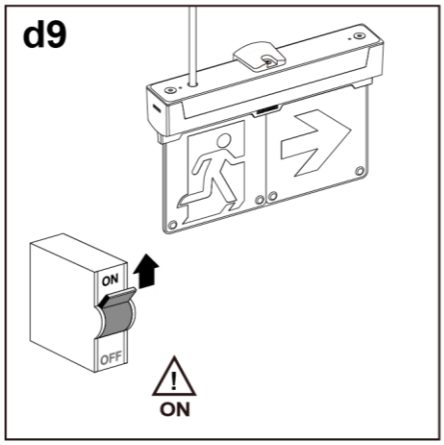

Kosnic Lighting Ltd, Unit 2, Kennetside, Bone Lane, Newbury, RG14 5PX, UK
Kosnic Lighting France, 2bis Avenue Irene Joliot-Curie, 77700 Bailly-Romainvilliers, France

E.Recessed mount

e1

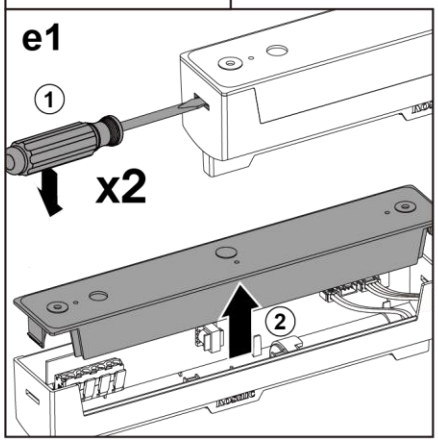

e2

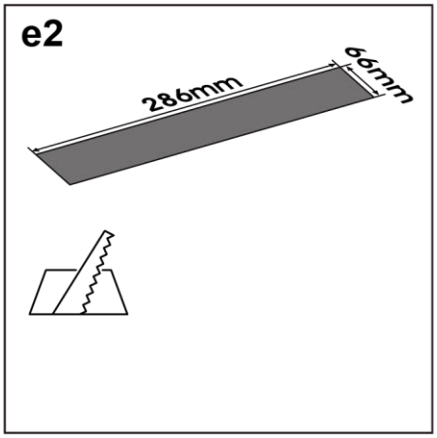

e3

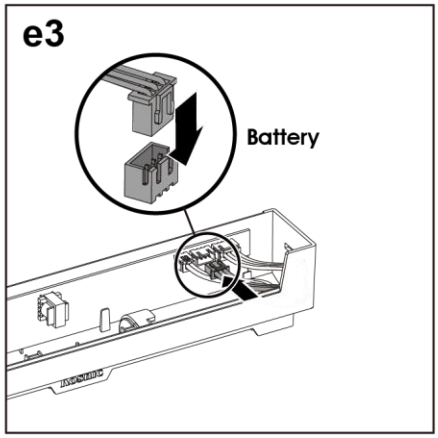

e4

220-240Vac

Maintained Light on Emergency (linked)
(Factory default setting)

L1 — Un-switched Live
L — Switched Live
E — Earth
N — Neutra

Maintained On/off switched Emergency

L1 — Un-switched Live
L — Switched Live
E — Earth
N — Neutra

Non-Maintained Light off Emergency (remove link)

L1 — Un-switched Live
L — Switched Live(do not use)
E — Earth
N — Neutra

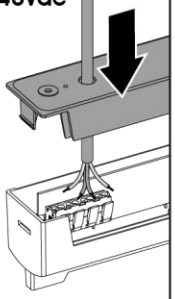

e5

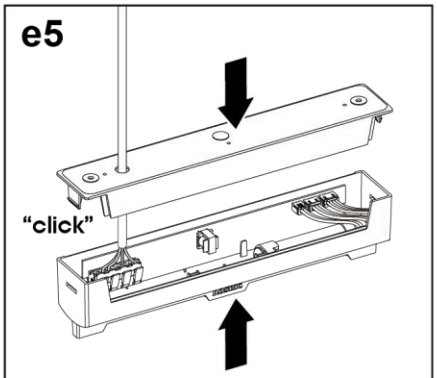

e6

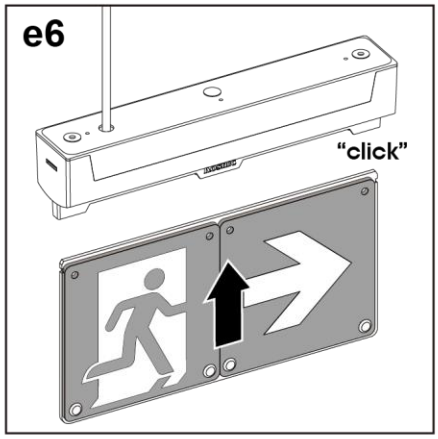

e7

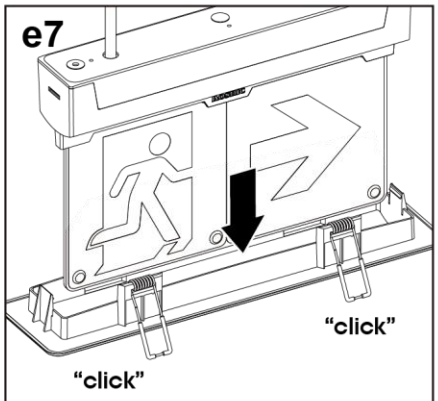

e8

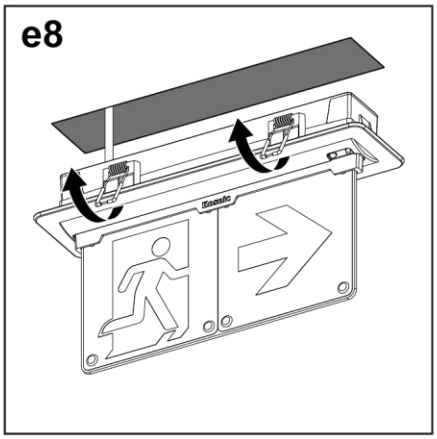

e9

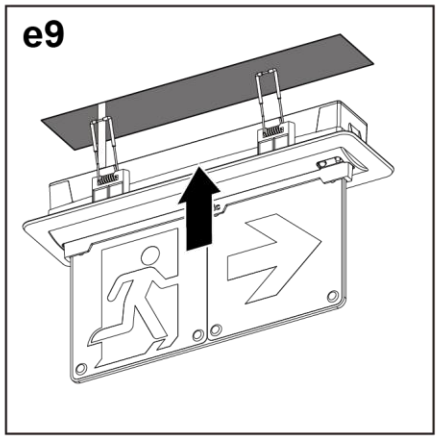

e10

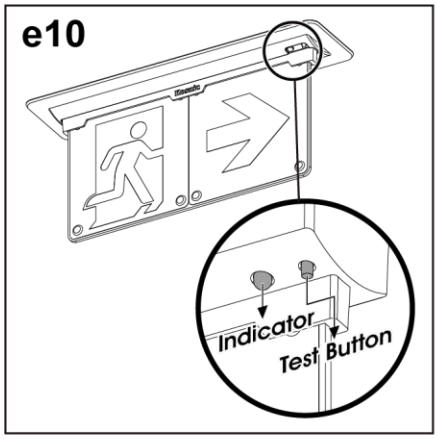

e11

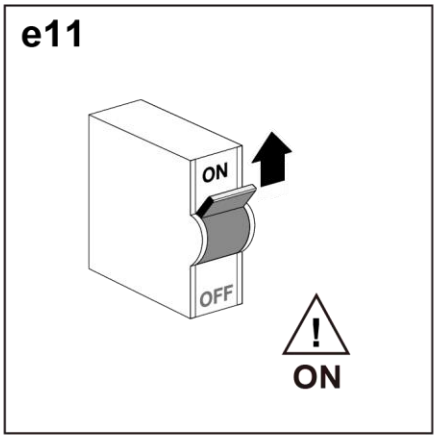

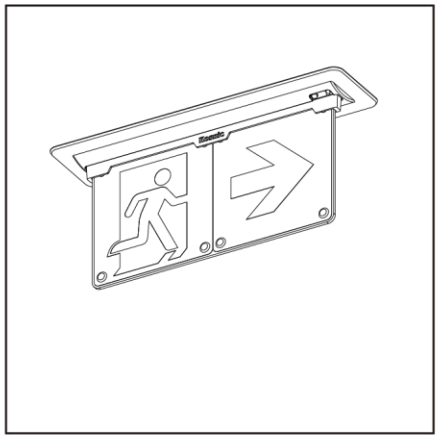

Kosnic Lighting Ltd, Unit 2, Kennetside, Bone Lane, Newbury, RG14 5PX, UK
Kosnic Lighting France, 2bis Avenue Irene Joliot-Curie, 77700 Bailly-Romainvilliers, France

F.Trunking mount

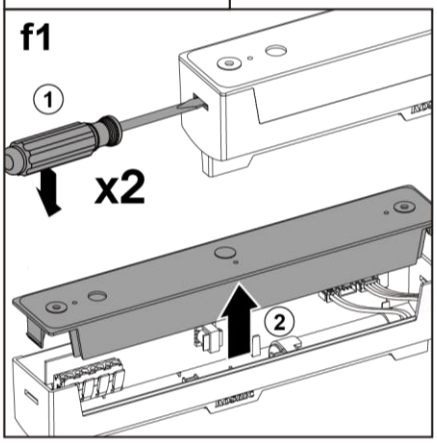

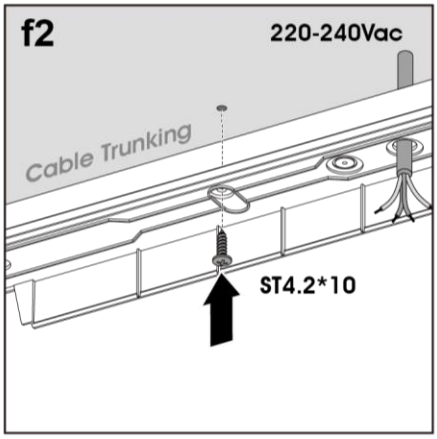

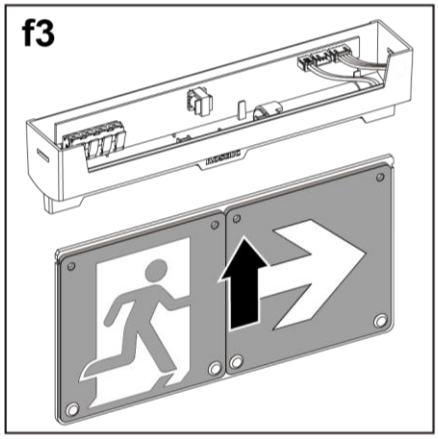

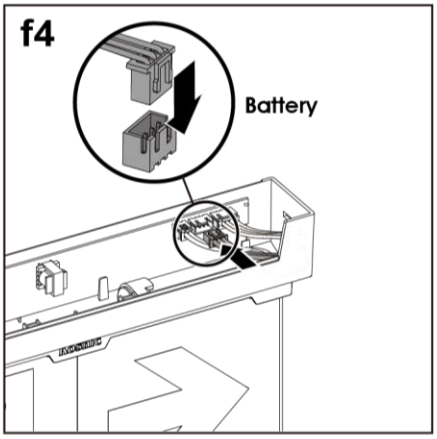

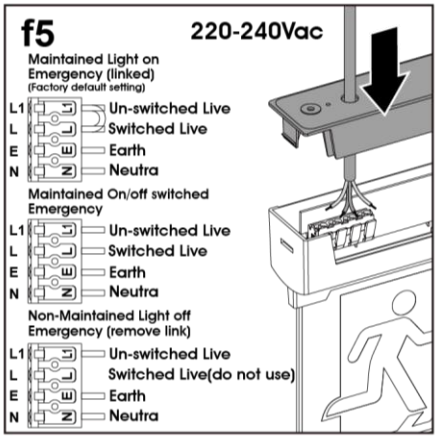

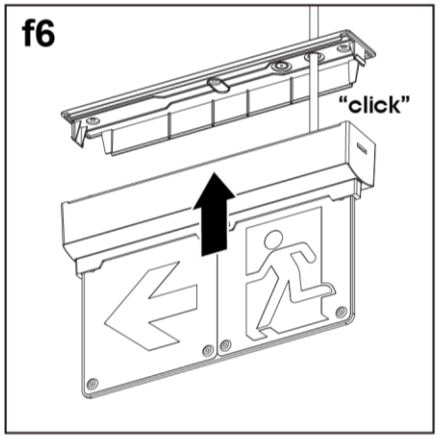

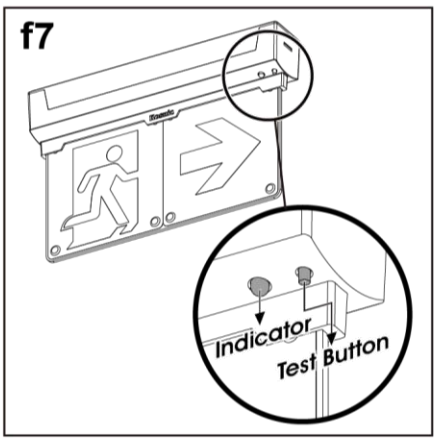

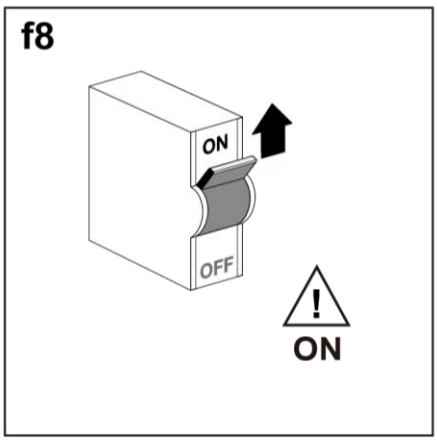

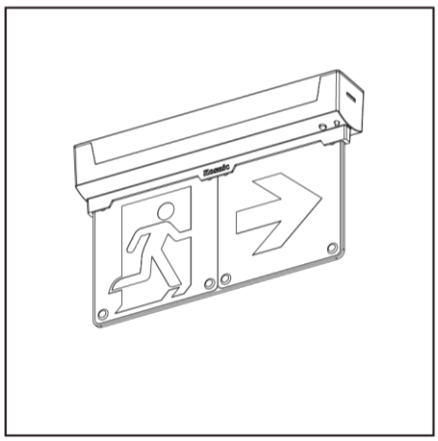

The Waste Electrical & Electronic Equipment Regulations (WEEE) require that products bearing this symbol must not be disposed of with household waste as they may contain substances harmful to the environment. The Local Authority can provide advice on recycling.

Kosnic Lighting Ltd, Unit 2, Kennetside, Bone Lane, Newbury, RG14 5PX, UK
Kosnic Lighting France, 2bis Avenue Irene Joliot-Curie, 77700 Bailly-Romainvilliers, France

www.kosnic.com

Automatic Self-Test Emergency Module User Guide

Please read these instructions thoroughly before use and retain for future reference.
If you are in any doubt about using this product, please consult a qualified electrician.

Commissioning

- Commissioning takes place by connecting the battery and then the un-switched supply. The battery must be connected first.
- The green LED will immediately flash 1 x second to indicate that there is a pending duration test.
- A duration test will occur at a random point between 24 hours and 48 hours after commissioning to allow up to 24 hours for battery charging.
- Any faults found in the duration testing will be reported via the LED indicator, as detailed below.
- Disconnecting the un-switched supply and then the battery resets the emergency module's schedule, this means that a function test will be performed 7 days form the time of reset and a duration test will be performed in 52 weeks.

Note: Resetting the module will **not** clear **Battery Duration Fault and Lamp or Luminaire Fault**. The user should initiate Duration Test or Functional Test to clear these faults. Please refer to the following instructions for details.

Note: The indicator will only be illuminated when connected to a supply, and not when in emergency mode. In the case of both a fault and duration test pending, only the fault will be displayed.

LED Indicator

●	Green	= System Healthy	●	Red	= Battery Charging Fault
●	Green Flash 1 x Second	= Duration Test Pending	●	Red Flash 2 x Second	= Battery Duration Fault
●	Green Flash 2 x Second	= Duration Test Running	●	Red Flash 4 x Second	= Lamp or Luminaire Fault
●	Green Flash 4 x Second	= Functional Test Running			

Duration Testing (3 hours)

- An automatic duration test will occur at a random point between 24 hours and 48 hours after commissioning to allow for battery charging.
- An automatic duration test will occur annually at a random point in the 52nd week after commissioning.
- A duration test will occur after pressing the manual test button for 5-10 seconds. The battery will be allowed to fully charge for up to a maximum of 24 hours, then a duration test will occur at a random point in following 24 hours.
- A duration test may be delayed by other events, such as a power cut that interrupts the test or a lack of charging time, in which case the green LED will continue to flash 1 x second to indicate there is a pending duration test.
- Any faults found in the duration testing will be reported via the LED indicator, as detailed above.
- A functional test will not override Battery Duration Fault. A full duration test or re-commissioning is required to clear such fault.

Functional Testing (<2 minutes)

- A short automatic functional test will occur every 7 days.
- A manual functional test will start immediately after pressing the manual test button for 1-2 seconds.
- Any faults found in the functional testing will be reported via the LED indicator, as detailed above.
- A functional test will not override Battery Duration Fault. A full duration test or re-commissioning is required to clear such fault.

Manual Testing

- Manual functional test: Press the manual test button for 1-2 seconds. A manual functional test lasting <2 minutes will start immediately.
- Manual duration test: Press the manual test button for 5-10 seconds. A manual duration test will occur at a random point between 0 and 24 hours after pressing the manual test button for 5-10 seconds. Time will be added to allow the battery to charge if the battery has been charging less than 24 hours.

Pending Duration Testing

- A duration test may be delayed by other events, such as a power cut that interrupts the test or charging period, in which case the green LED will flash to indicate there is a pending duration test that the emergency module has rescheduled until charging is complete.

Lamp or Luminaire Fault

- Turn off the supply and replace or correct the fault with the lamp or luminaire, and then reconnect the supply.
- Press the manual test button for 1-2 seconds. A manual functional test lasting <2 minutes will start immediately to clear the fault.
- Alternatively press the manual test button for 5-10 seconds. A manual duration test will occur at a random point between 0 and 24 hours after pressing the manual test button for 5-10 seconds. Time will be added to allow the battery to charge if the battery has been charging less than 24 hours. The fault LED indication is overridden, during the pending and testing period.
- If the battery and power have been disconnected the module will re-commission and automatically test the replacement.
- A functional test will not override Battery Duration Fault. A full duration test or re-commissioning is required to clear such fault.

Battery Charging Fault & Battery Duration Fault

- Turn off the un-switched supply to the emergency module and replace the battery, and then reconnect the supply.
- If the fault was because the battery was not connected, the un-switched supply must still be turned off when connecting the battery to clear the battery charging fault.

Kosnic Lighting Ltd, Unit 2, Kennetside, Bone Lane, Newbury, RG14 5PX, UK
Kosnic Lighting France, 2bis Avenue Irene Joliot-Curie, 77700 Bailly-Romainvilliers, France

- To clear a battery duration fault after replacing the battery a duration test will need to be successfully completed, see duration test procedure.

Kosnic Lighting Ltd, Unit 2, Kennetside, Bone Lane, Newbury, RG14 5PX, UK
Kosnic Lighting France, 2bis Avenue Irene Joliot-Curie, 77700 Bailly-Romainvilliers, France