Installation Instructions

Instrucciones de instalación, Instructions d'installation, Installationsanleitung, إرشادات التركيب ,
Installatie-instructies, Instruções de instalação, Installatie-instructies,
設置手順説明, **Οδηγίες εγκατάστασης**

Part Code: [AZLP /2]

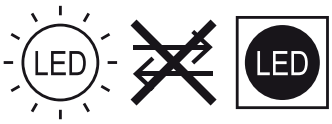

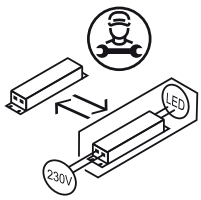

Master Translations QR Link

IP 65

AL POLY

Dimensions and Weights

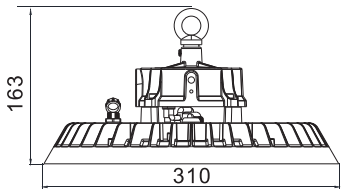

75W-100W-125W

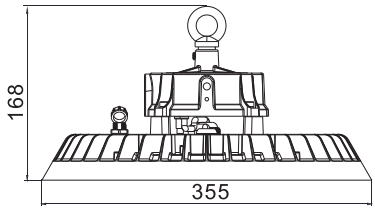

150W-175W-200W

Model	Power	Product L*W*H (mm)	Carton L*W*H (mm)	NW (kg) ±0.1	GW (kg) ±0.1
AZLP1/2	75W/100W/125W	310*310*163	335*315*128	2.24	2.74
AZLP2/2	150W/175W/200W	355*355*168	383*360*133	2.82	3.42

Wiring Diagram

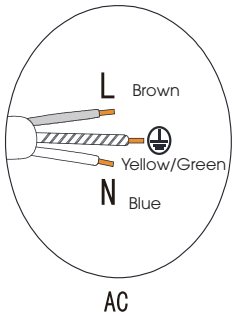

AC

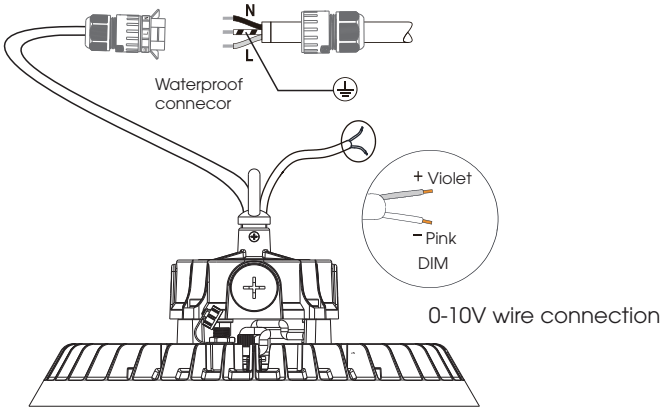

0-10V wire connection

CCT and Power Adjustable

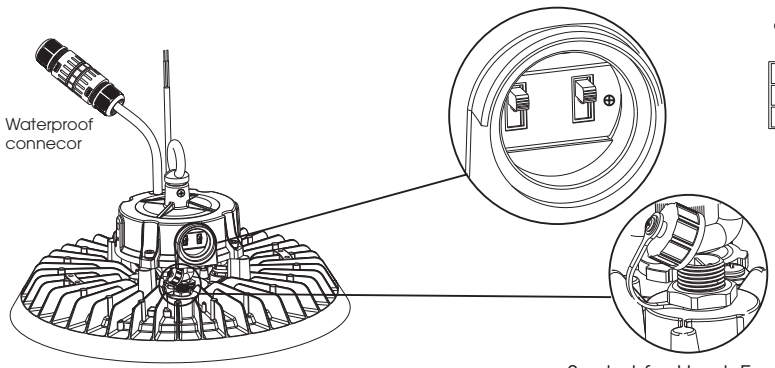

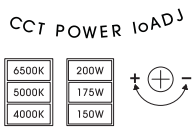

AZLP2/2

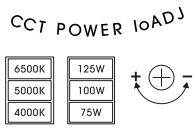

AZLP1/2

Socket for Hawk Emergency Pack
Should be tightened if not use.

Ansell Electrical Products
Unit 6B, Stonecross Industrial Park,
Yew Tree Way,
Warrington,
WA3 3JD

Ansell (Sales & Distribution)
Unit 2, M2 Business Park,
Duncrue Street,
Belfast,
BT3 9AQ

Ansell (Sales & Distribution) Republic of Ireland Limited
Unit G1, Block G,
Calmount Park, Ballymount
Dublin 12,
D12 TH56

www.ansell-lighting.com

Warrington Tel: +44 (0)1942 433333 Belfast Tel: +44 (0)2890 773750 International Tel: +44 (0)1942 433343 Spain Tel: 00 34 938 005642

1

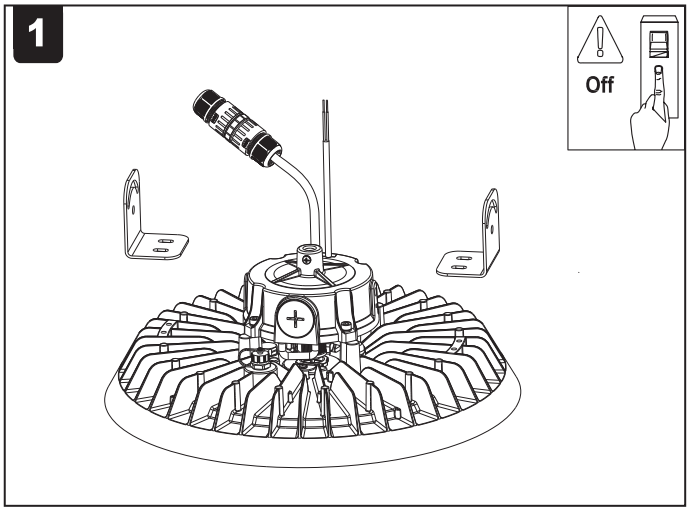

2

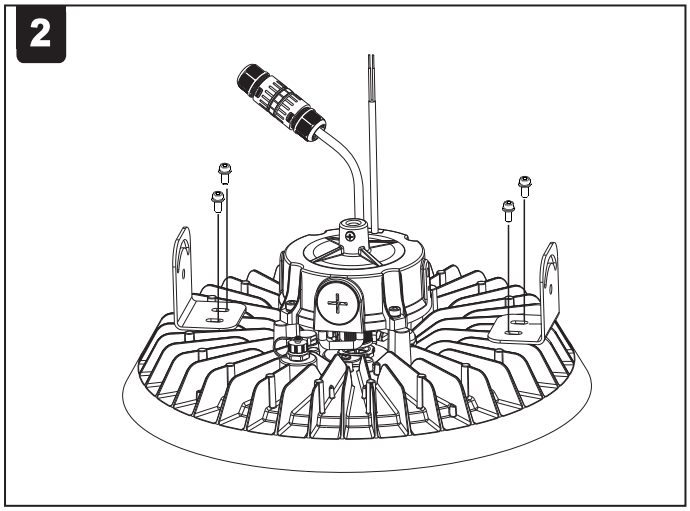

3

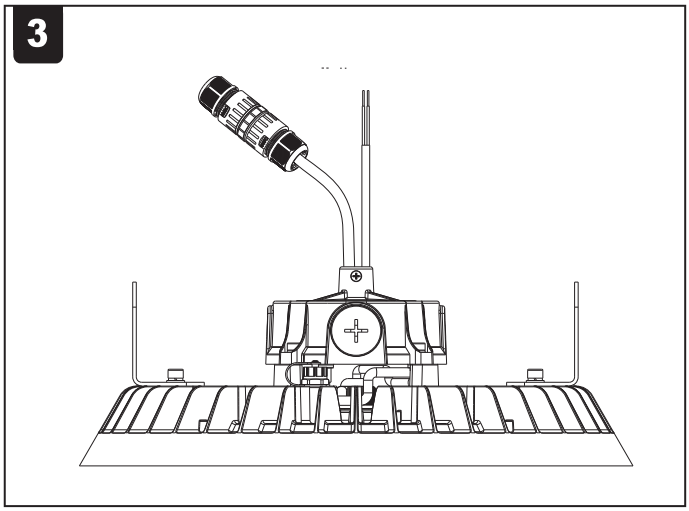

4

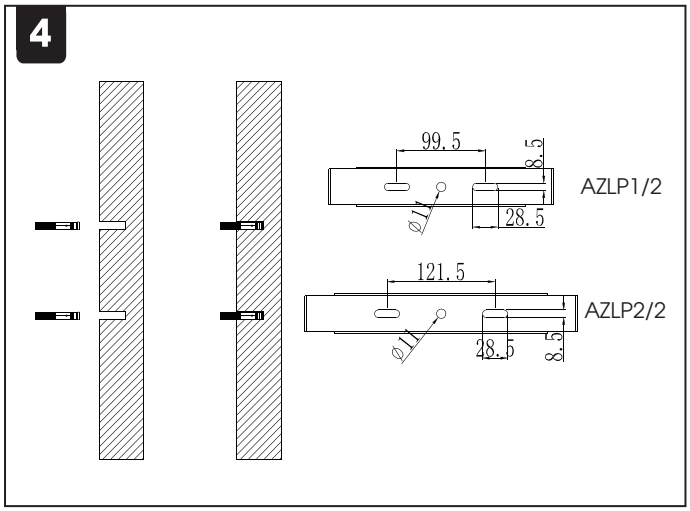

5

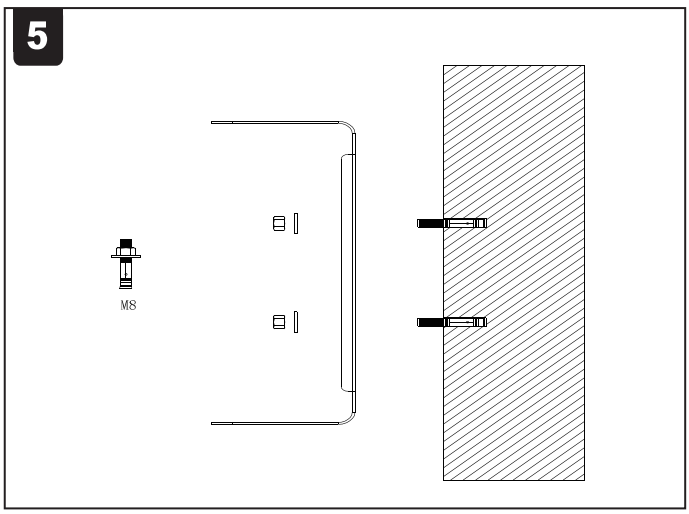

6

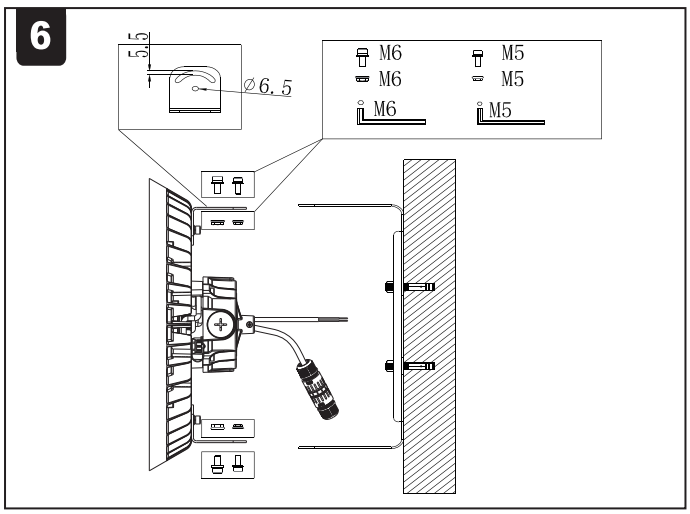

Ansell Electrical Products
Unit 6B, Stonecross Industrial Park,
Yew Tree Way,
Warrington,
WA3 3JD

Ansell (Sales & Distribution)
Unit 2, M2 Business Park,
Duncrue Street,
Belfast,
BT3 9AQ

Ansell (Sales & Distribution) Republic of Ireland Limited
Unit G1, Block G,
Calmount Park, Ballymount
Dublin 12,
D12 TH56

www.ansell-lighting.com

Warrington Tel: +44 (0)1942 433333
Belfast Tel: +44 (0)2890 773750
International Tel: +44 (0)1942 433343
Spain Tel: 00 34 938 005642

7

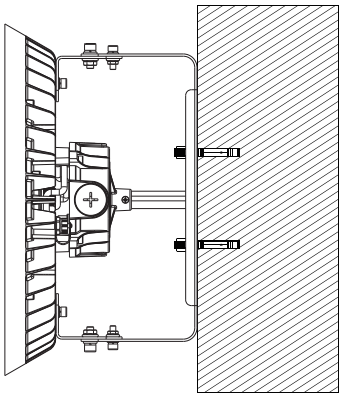

8

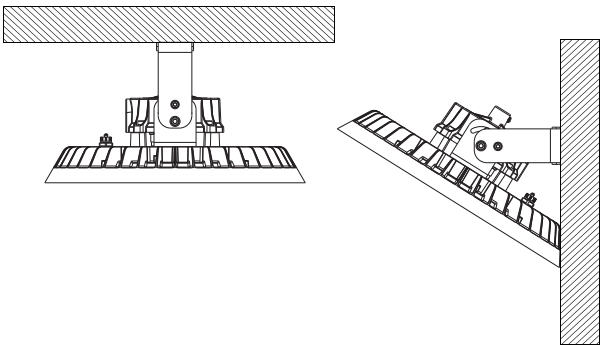

9 Aluminium Reflector installation if needed.

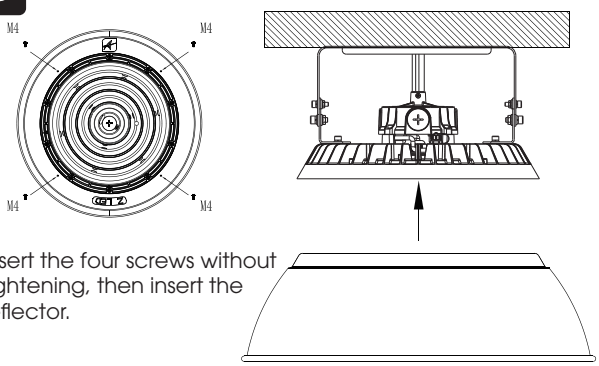

Insert the four screws without tightening, then insert the reflector.

10

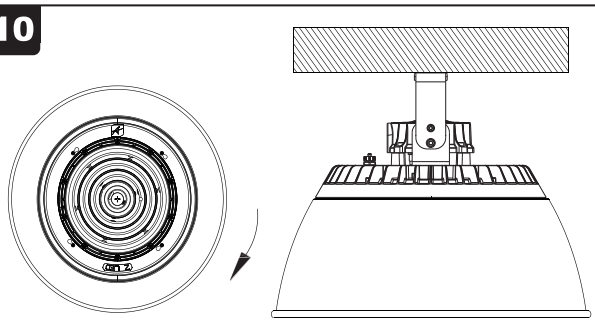

Rotate clockwise the reflector then tighten the four screws

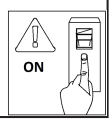

Installation of fail-safe catenary wire recommended.

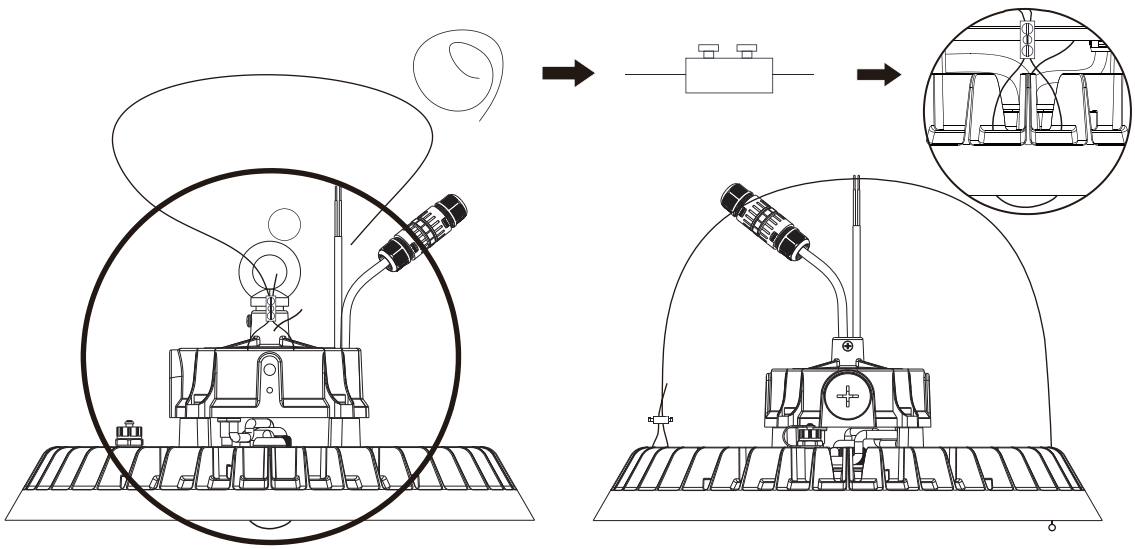

Ansell Electrical Products
Unit 6B, Stonecross Industrial Park,
Yew Tree Way,
Warrington,
WA3 3JD

Ansell (Sales & Distribution)
Unit 2, M2 Business Park,
Duncrue Street,
Belfast,
BT3 9AQ

Ansell (Sales & Distribution) Republic of Ireland Limited
Unit G1, Block G,
Calmount Park, Ballymount
Dublin 12,
D12 TH56

www.ansell-lighting.com

Warrington Tel: +44 (0)1942 433333 Belfast Tel: +44 (0)2890 773750 International Tel: +44 (0)1942 433343 Spain Tel: 00 34 938 005642