Tornado Evo

Part of the Battens and Weatherproofs product category

Model	Tornado EVO CCT Multi Wattage 1500mm
Code	ATORE5/2
Application	Ancillary, Commercial, Education, Healthcare, Hospitality, Industrial, Retail

GENERAL INFORMATION

Input	220-240V
Wattage	30W/40W/50W/60W
Operating Temp	-20°C - 40°C
Lumens Delivered	4600lm - 8600lm (4000K)
lm/W	150lm/W (4000K)
CCT	4000/5000/6500K
Beam Angle	120

MATERIAL INFORMATION

Main Material	Polycarbonate
Diffuser Material	Polycarbonate
Product Weight without Packaging	1.75 kg
Colour / Finish	Grey
Height	81 mm

TECHNICAL INFORMATION

Class Protection	1
Light Source	LED
SDCM (Initial Macadam)	6
CRI	80
Internal / External	Internal / External
Surface / Recessed / Suspended	Ceiling, Suspended
Power Factor	0.9
L70 @ 25°C	L70 100,000h

PRODUCT FEATURES

- IP66 non-corrosive batten suitable for industrial applications and ancillary areas
- High efficiency up to 160 Lm/W
- CCT selectable between 4000K, 5000K and 6500K and power selectable; offering a choice of 4 outputs, in one luminaire
- Slim sloped diffuser design creates sleek appearance and offers greater light distribution
- LED performance allows point-to-point replacement of existing fluorescent luminaires

ACCESSORIES

AXPL/1/3NM	XPRESS Linear Emergency Kit
AXPL/1/3NM/DA	XPRESS Linear DALI Emergency Kit
AXPL/MWS/1	XPRESS Linear Clip-in Microwave Sensor On/Off
AZH/RP/1	Sensor Remote Programmer



Increased Flexibility

Three side conduit entries allow for **enhanced flexibility** and **faster installations**

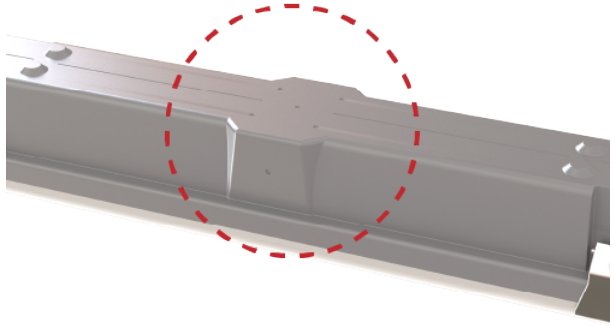

Tornado Evo

Part of the Battens and Weatherproofs product category

Model	Tornado EVO CCT Multi Wattage 1500mm
Code	ATORE5/2
Application	Ancillary, Commercial, Education, Healthcare, Hospitality, Industrial, Retail

