

@ansell_lighting
anselllighting
Ansell Lighting
ansell_lighting

Legion Emergency Three

Category	Track Lighting
Application	Hospitality, Residential, Retail
Specification	Architectural

Legion Emergency Three Circuit Trackspot Black

Code: ALEGLED/B

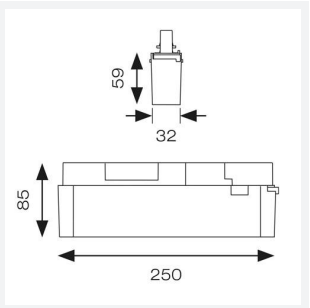

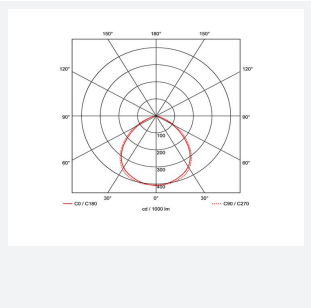

PRODUCT FEATURES

- Three circuit non-maintained emergency trackspot
- Power and green charge LED are discreetly incorporated within the head
- 3.2W LED light source produces 250 lumens
- Must be used in conjunction with the Primo 3 circuit track
- Simply clip onto existing track system for instant emergency lighting solution
- Available in black and white finishes
- 105° beam angle
- Please note, this product is not compatible with single circuit track systems

GENERAL INFORMATION	
Wattage	3W
Lumens Delivered	250lm
Lm/W	78lm/W
Beam Angle	105
CRI	70
CCT	6500K
Input	220/240V
Operating Temp	0°C - 40°C

TECHNICAL INFORMATION	
Light Source	LED
Colour / Finish	Black
IP Rating	IP20
Class Protection	1
Internal / External	Internal
Lumen Depreciation	L70 50,000h
Warranty (Years)	5
CE Mark	Yes
Height	85 mm
Accessories	ASBP/27/LI

Legion

- Three circuit non-maintained emergency trackspot
- Simply clip onto existing track system for instant emergency lighting solution
- Power and green charge LED are discreetly incorporated within the head
- Available in black and white finishes
- 3.2W LED light source produces 250 lumens
- 105° beam angle
- **Must be used in conjunction with the Primo 3 circuit track (see p160-p161)**
- **Please note, this product is not compatible with single circuit track systems**

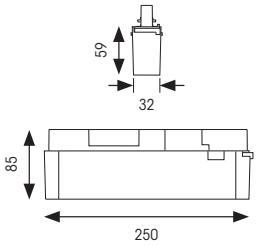





Emergency Standby



Emergency Operation



Installed on track system



Black

INPUT	HERTZ	TEMP	CRI	BEAM ANGLE	CLASS	IP
220/240V	50/60Hz	0°C to 40°C	Ra 70	105°	1	IP20

CODE	DESCRIPTION	WATTAGE	CCT	LUMENS	LM/W
ALEGLED/W	Daylight - White	3.2W	6000K	250lm	78lm
ALEGLED/B	Daylight - Black				

CODE (ACCESSORIES)	DESCRIPTION
ASBP/27/LI	3.2V 6Ah Li-FePO4 Replacement Battery