Installation Instructions

Instrucciones de instalación, Instructions d'installation, Installationsanleitung, إرشادات التركيب ,
Installatie-instructies, Instruções de instalação, Installatie-instructies,
設置手順説明, **Οδηγίες εγκατάστασης**

Product Code: [ALEG/P3/1/NM/W]
[ALEG/P3/1/NM/B]

Master Translations QR Link

IP 20

POLY LiFePO4 6.4V 3200mAh

1 Open the hatch door with a flat screwdriver

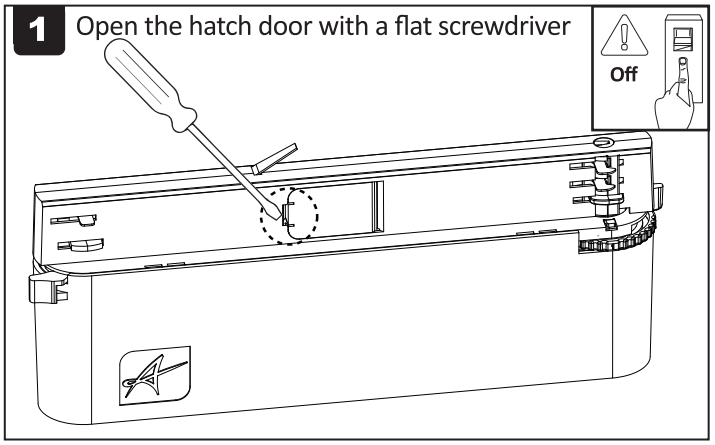

2 Switch on for battery connection

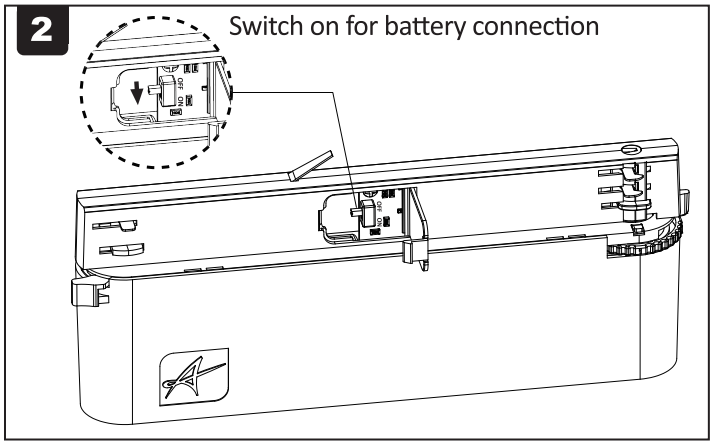

3 Put the luminaire onto the track in right direction

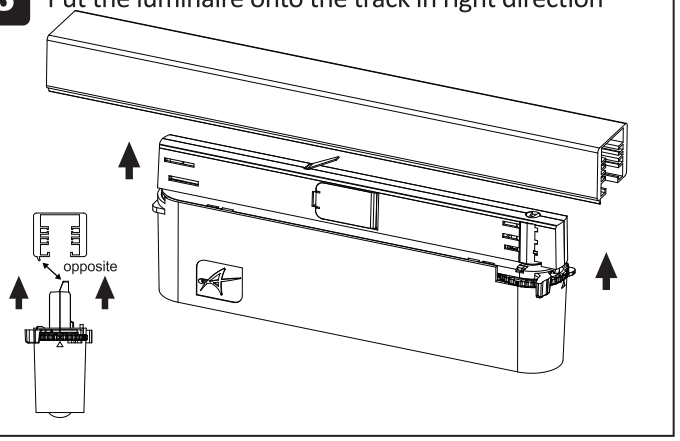

4 Twist and lock lever A and lever B when the luminaire is in correct position

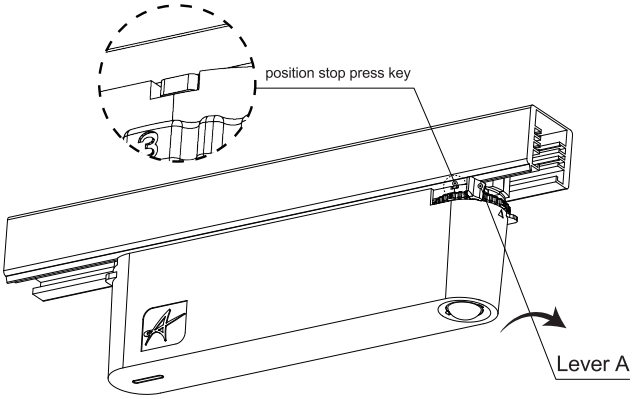

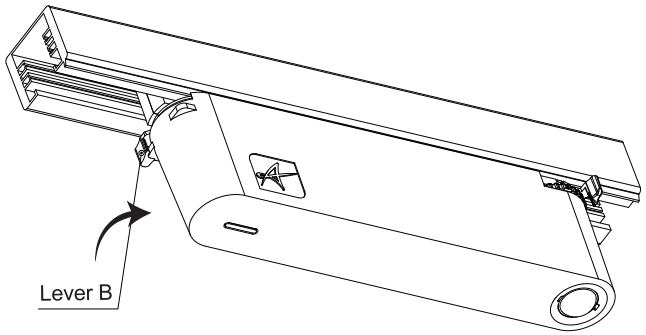

5 Twist the dial to the required circuit number(1,2 or 3) Installation complete

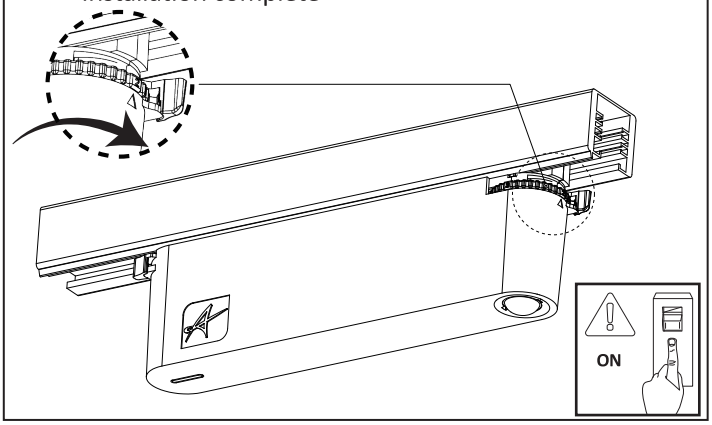

Ansell Electrical Products
Unit 6B, Stonecross Industrial Park,
Yew Tree Way,
Warrington,
WA3 3JD

Ansell (Sales & Distribution)
Unit 2, M2 Business Park,
Duncrue Street,
Belfast,
BT3 9AQ

Ansell (Sales & Distribution) Republic of Ireland Limited
Unit G1, Block G,
Calmount Park, Calmount Avenue
Dublin 12,
D12 TH56

www.ansell-lighting.com

Warrington Tel: +44 (0)1942 433333 Belfast Tel: +44 (0)2890 773750 International Tel: +44 (0)1942 433343 Spain Tel: 00 34 938 005642

Issue Number: [2]

Changing the Lens

Press the lens gently and rotate it out, please be careful and prevent the lens from falling off

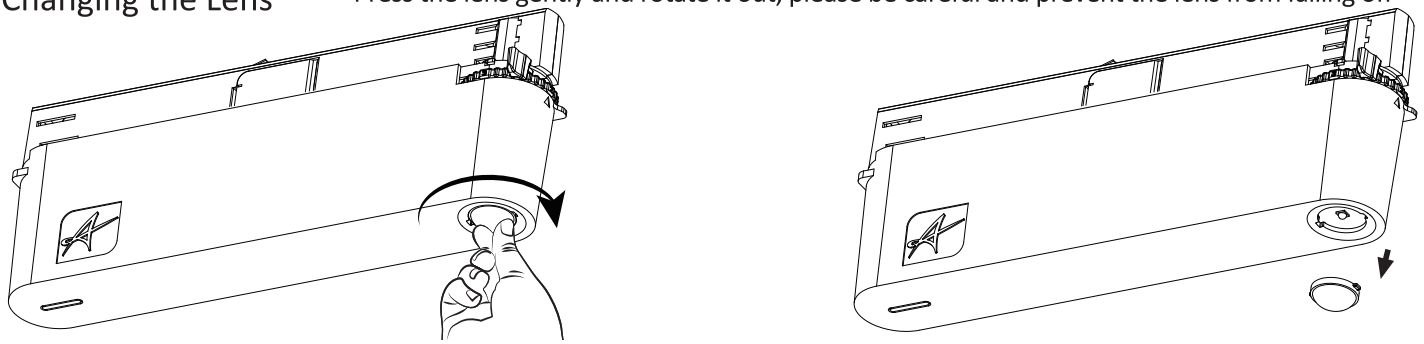

Gently press and rotate the replacement Lens into the housing to required direction

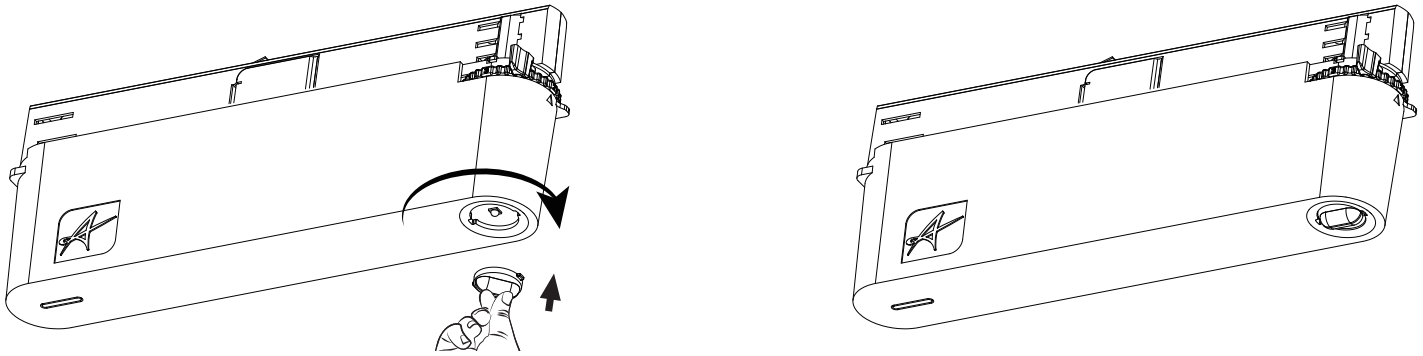

Battery Replacement

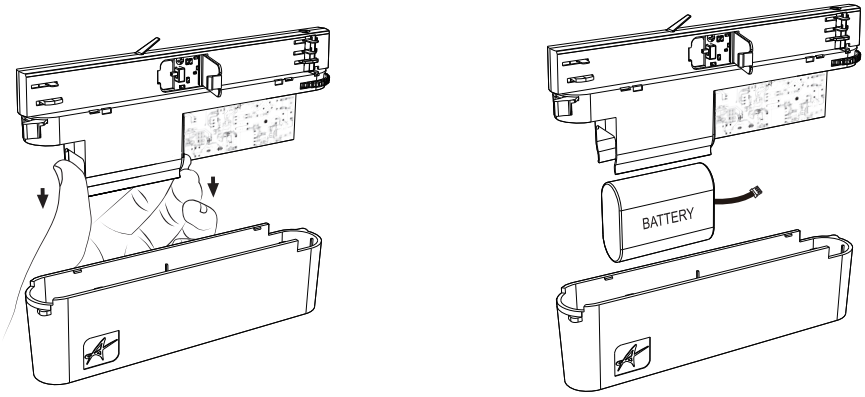

1. Instruction for Automatic test function

Once the unit is powered up, a self-diagnostics test will be automatically initiated:

- Check battery, lamp, charge board and transfer fault all the time.
- Run 3mins duration test every month.
- Run 1H or 3H duration test every year.

Note: All test functions are preset and no need field adjustment.

2. Dual Colour LED Status Indicator Meaning

- Green indicator solid on: Ready/ Normal Operation
- Red indicator flashes: Require service

•	One flash, 4s pause	Battery disconnected
••	Two flashes, 4s pause	Low battery voltage
•••	Three flashes, 4s pause	Charge board fault
••••	Four flashes, 4s pause	AC/DC transfer fault
•••••	Five flashes, 4s pause	LED lamp fault

Note: When the fault is recovered, press the test button for 2s, the red flashing indicator will turn green. The fault is cleared, and the unit is back to normal.

3. Default setting is Auto test. If need Normal emergency mode/ Manual test, please remove the jumper.

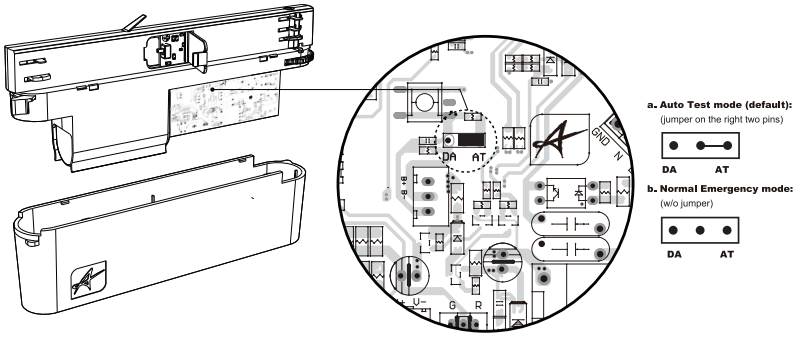

Remark:

LiFePO4 battery could not be charged below 0℃ or above 60℃ according to IEC 60598-2-22.
When the battery temperature is detected below 0℃ or above 60℃, the LED indicator will be off and the battery will stop charging.

Ansell Electrical Products
Unit 6B, Stonecross Industrial Park,
Yew Tree Way,
Warrington,
WA3 3JD

Ansell (Sales & Distribution)
Unit 2, M2 Business Park,
Duncrue Street,
Belfast,
BT3 9AQ

Ansell (Sales & Distribution) Republic of Ireland Limited
Unit G1, Block G,
Calmount Park, Calmount Avenue
Dublin 12,
D12 TH56

www.ansell-lighting.com

Warrington Tel: +44 (0)1942 433333 Belfast Tel: +44 (0)2890 773750 International Tel: +44 (0)1942 433343 Spain Tel: 00 34 938 005642