

Category	Downlights
Application	Ancillary, Commercial, Education, Healthcare, Hospitality, Retail
Specification	Performance

Comfort EVO

Comfort EVO 2 Dual Output CCT Downlight White

Code: ACOM2/1







PRODUCT FEATURES

- Economic high performance CCT selectable IP44 downlight suitable for commercial and healthcare applications
- Deep cut-off angle for glare control and comfort
- Downlight design allows installation into existing hole cut-outs of 210mm
- Polycarbonate housing with unique thermal management for durability and optimum lifespan
- Intelligent and eco-friendly 3 part design allows end user the choice of either black or white reflector and trim accessories to add to the downlight (ACOM*/1), offering great customisation and product upgradability
- CCT selectable between 3000K and 4000K and power selectable; offering a choice of 2 outputs, in one luminaire
- Anti-Ligature kit available for installation in secure environments such as healthcare and educational facilities
- Dimmable and Emergency options, standard and Self-Test Emergency available using the Hawk Kit Emergency Pack

GENERAL INFORMATION

Wattage	17W - 21W
Lumens Delivered	2300lm - 2800lm (4000K)
Lm/W	130lm/W (4000K)
Beam Angle	80
CRI	80
CCT	3000/4000K
Input	220-240V
Operating Temp	-20°C - 25°C
SDCM	3
UGR	23
Cut-Out Size	210mm
Energy efficiency class	F
Product Weight without Packaging	0.38 kg

TECHNICAL INFORMATION

Light Source	LED
Colour / Finish	White
IP Rating	IP44
Class Protection	2
Internal / External	Internal
Surface / Recessed / Suspended	Recessed
Lumen Depreciation	L80 60,000h
Warranty (Years)	5
CE Mark	Yes
Height	62 mm



Category	Downlights
Application	Ancillary, Commercial, Education, Healthcare, Hospitality, Retail
Specification	Performance

Comfort EVO

Comfort EVO 2 Dual Output CCT Downlight White

Code: ACOM2/1

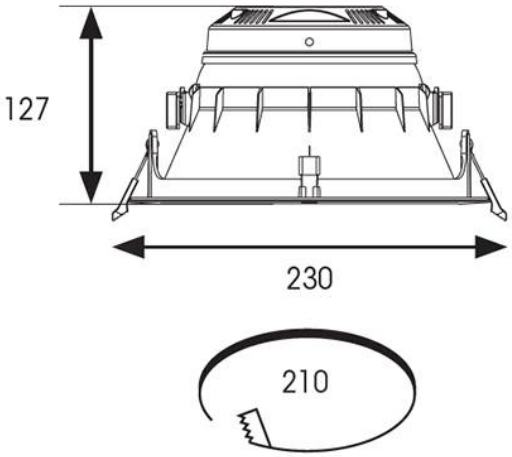

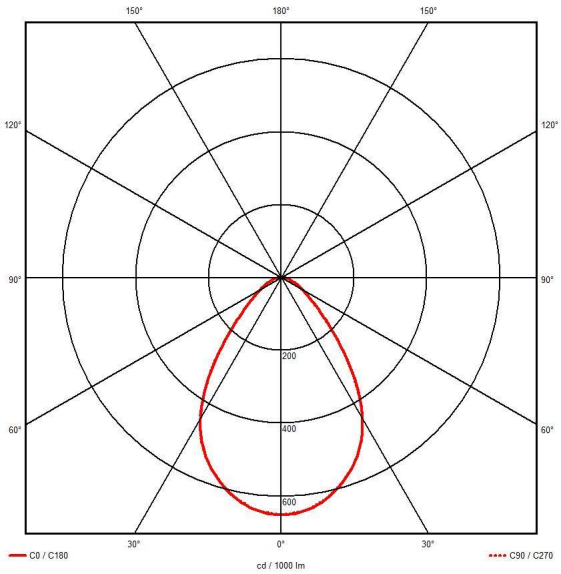

ACCESSORIES	
ACOM/TR/W/1	Comfort EVO White Reflector and Trim
ACOM/TR/S/1	Comfort EVO Satin Chrome Reflector and White Trim
ACOM/TR/B/1	Comfort EVO Black Reflector and Trim
ACOM/TR/P/1	Comfort EVO Polished Chrome Reflector and White Trim
AARXDLK/1	ARX Downlight Anti-Ligature Kit
AHUEMKIT/LI	Hawk Universal Lithium Emergency Kit Maintained/Non-maintained

MANDATORY ACCESSORIES	
ACOM/TR/W/1	Comfort EVO White Reflector and Trim
ACOM/TR/B/1	Comfort EVO Black Reflector and Trim