

@ansell_lighting ansellllighting
Ansell Lighting ansell_lighting

Anzo

Category	Downlights
Application	Ancillary, Commercial, Residential, Retail
Specification	Performance

Anzo MultiLED 300mm CCT Adjustable Downlight

Code: ANZOLED300/CCT/DIM

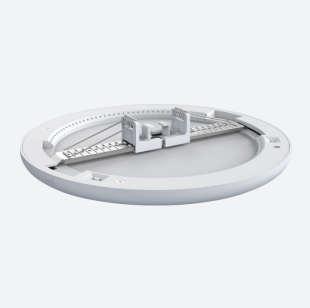



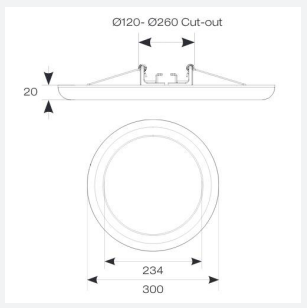

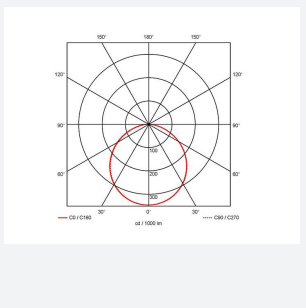

PRODUCT FEATURES

- Ultra-slim adjustable LED performance downlight suitable for semi-commercial and residential applications
- Innovative bracket / spring design for variable cut-outs from 120-260mm
- ANZOLED/CCT Non-dimmable
- ANZOLED300/CCT/PIR adjustable PIR
- Integral switches for multiple wattages and selectable CCT
- Pre-wired with 300mm cable
- ANZOLED/CCT/DIM Triac dimmable as standard

GENERAL INFORMATION	
Wattage	16W - 22W
Lumens Delivered	1900lm - 2600lm (4000K)
Lm/W	121lm/W - 116lm/W (4000K)
Beam Angle	110
CRI	80
CCT	3000/4000/6000K
Input	220/240V
Operating Temp	-10°C - 40°C
SDCM	6
UGR	25
Cut-Out Size	120-260mm

TECHNICAL INFORMATION	
Light Source	LED
Colour / Finish	White
IP Rating	IP20
Class Protection	2
Internal / External	Internal
Surface / Recessed / Suspended	Ceiling, Recessed
Lumen Depreciation	L70 54,000h
Warranty (Years)	3
CE Mark	Yes
Diameter	300 mm
Height	20 mm