

@ansell_lighting
anselllighting
Ansell Lighting
ansell_lighting

Anzo

Category	Downlights
Application	Ancillary, Commercial, Residential, Retail
Specification	Performance

Anzo MultiLED 230mm CCT Adjustable Downlight

Code: ANZOLED/CCT/DIM

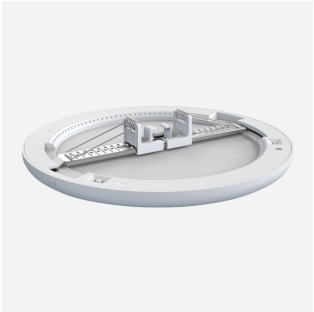



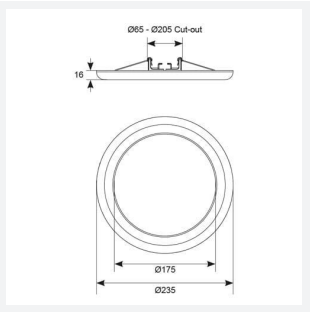

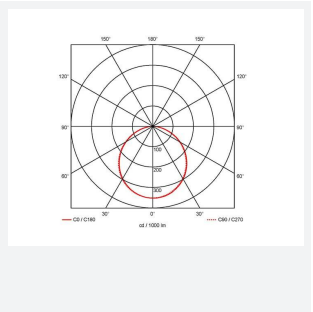

PRODUCT FEATURES

- Ultra-slim adjustable LED performance downlight suitable for semi-commercial and residential applications
- Innovative bracket / spring design for variable cut-outs from 120-260mm
- ANZOLED/CCT Non-dimmable
- ANZOLED300/CCT/PIR adjustable PIR
- Integral switches for multiple wattages and selectable CCT
- Pre-wired with 300mm cable
- ANZOLED/CCT/DIM Triac dimmable as standard

GENERAL INFORMATION	
Wattage	10W - 16W
Lumens Delivered	1100lm - 1700lm (4000K)
Lm/W	109lm/W (4000K)
Beam Angle	110
CRI	80
CCT	3000/4000/6000K
Input	200/240V
Operating Temp	-20°C - 40°C
SDCM	6
UGR	26
Cut-Out Size	65x205mm

TECHNICAL INFORMATION	
Light Source	LED
Colour / Finish	White
IP Rating	IP20
Class Protection	2
Internal / External	Internal
Surface / Recessed / Suspended	Ceiling, Recessed
Lumen Depreciation	L70 54,000h
Warranty (Years)	3
CE Mark	Yes
Diameter	235 mm
Height	16 mm