

@ansell_lighting
anselllighting
Ansell Lighting
ansell_lighting

Primo Three Circuit

Category	Track Lighting
Application	Ancillary, Hospitality, Residential, Retail
Specification	Architectural

Primo 3 Three Circuit Warm White Mains White

Code: APRT3/P3/1/WW/W

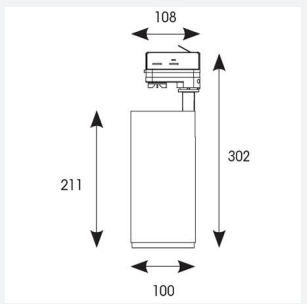

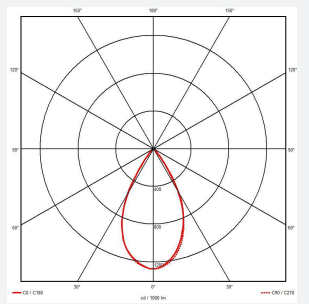

PRODUCT FEATURES

- Three circuit modern and slimline LED track spot with integral driver suitable for hospitality, residential, retail and ancillary applications
- 350° rotation with 0-90° tilt on the bracket
- Anti-glare design to create visual comfort
- Gold trim ring accessory available for unique appearance
- Lightweight aluminium design provides sleek appearance and easy install
- Mirror finish anodized reflector
- Interchangeable 24° and 36° lens accessories ensuring suitability for a range of application installations
- Triac dimmable as standard, DALI dimmable option also available

GENERAL INFORMATION	
Wattage	30W
Lumens Delivered	2800lm
Lm/W	93lm/W
Beam Angle	60
CRI	90
CCT	3000K
Input	220/240V
Operating Temp	-20°C - 40°C
SDCM	3
UGR	22
Product Weight without Packaging	1.15 kg

TECHNICAL INFORMATION	
Light Source	LED
Colour / Finish	White
IP Rating	IP20
Class Protection	1
Internal / External	Internal
Lumen Depreciation	L80 36,000h
Warranty (Years)	5
CE Mark	Yes
Diameter	100 mm
Height	302 mm