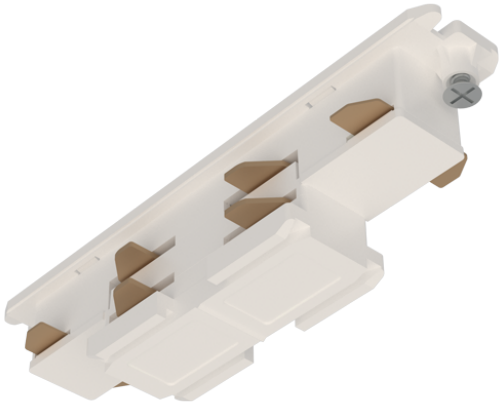

| | |
|---|---|
| **Category** | Track Lighting |
| **Application** | Ancillary, Hospitality, Residential, Retail |
| **Specification** | Architectural |

# Primo Single Circuit Track and Accessories

Primo Single Circuit Mini Joiner White

**Code:** APRT/P1/MJ/1/W

## PRODUCT FEATURES

- Primo Single Circuit Mini Joiner White

## GENERAL INFORMATION

| | |
|---|---|
| **Product Weight without Packaging** | 0.03 kg |

## TECHNICAL INFORMATION

| | |
|---|---|
| **Colour / Finish** | White |
| **Warranty (Years)** | 5 |
| **Height** | 20 mm |

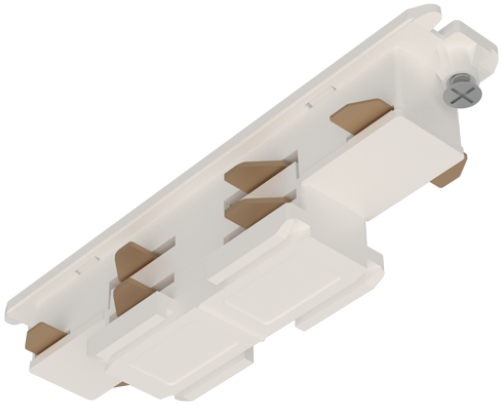

| | |
|---|---|
| **Category** | Track Lighting |
| **Application** | Ancillary, Hospitality, Residential, Retail |
| **Specification** | Architectural |

# Primo Single Circuit Track and Accessories

Primo Single Circuit Mini Joiner White

**Code:** APRT/P1/MJ/1/W