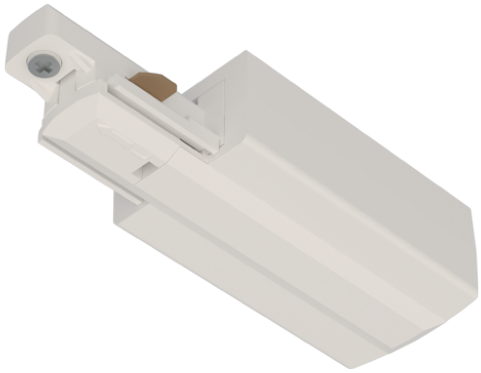

Category	Track Lighting
Application	Ancillary, Hospitality, Residential, Retail
Specification	Architectural

Primo Single Circuit Track and Accessories

Primo Single Circuit Live End Right White

Code: APRT/P1/LE/R/1/W

PRODUCT FEATURES

- Primo Single Circuit Track and Accessories
- Option of left and right feed for Live end, L and T connectors

GENERAL INFORMATION

Input	220-240V
Product Weight without Packaging	0.03 kg

TECHNICAL INFORMATION

Colour / Finish	White
IP Rating	IP20
Internal / External	Internal
Warranty (Years)	5
CE Mark	Yes
Height	22 mm

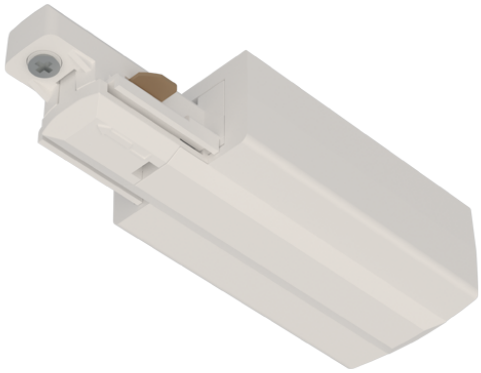

Category	Track Lighting
Application	Ancillary, Hospitality, Residential, Retail
Specification	Architectural

Primo Single Circuit Track and Accessories

Primo Single Circuit Live End Right White

Code: APRT/P1/LE/R/1/W