

@ansell_lighting
anselllighting
Ansell Lighting
ansell_lighting

Matrix

Category	Cabinet and Bathroom Fittings
Application	Hospitality, Residential, Retail
Specification	Performance

Matrix CCT Linklight 200mm
Code: AMALED20/CCT

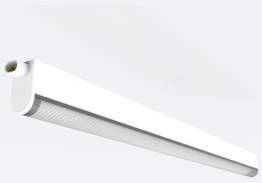



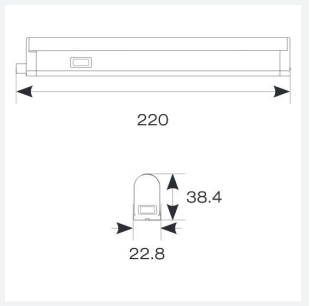

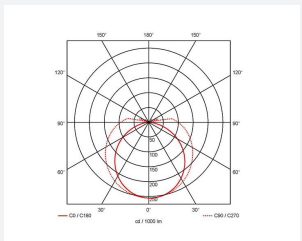

PRODUCT FEATURES

- CCT Selectable LED linklight with integral driver suitable for residential and hospitality applications
- Moulded spine fitted with integral switch and fixed diffuser
- Supplied c/w 1.5m mains power lead
- Non-dimmable
- Side mounted switch allows installer the choice of 3000K or 4000K colour temperature options
- c/w angled and straight fixing clips
- Linkable up to a maximum of twelve fittings

GENERAL INFORMATION

Wattage	3W
Lumens Delivered	290lm (4000K)
Lm/W	97lm/W (4000K)
Beam Angle	100
CRI	80
CCT	3000/4000K
Input	220/240V
Operating Temp	-10°C - 40°C
SDCM	6
UGR	20
Product Weight without Packaging	0.147 kg

TECHNICAL INFORMATION

Light Source	LED
Colour / Finish	White
IP Rating	IP20
Class Protection	2
Internal / External	Internal
Surface / Recessed / Suspended	Ceiling, Wall
Lumen Depreciation	L70 25,000h
Warranty (Years)	4
CE Mark	Yes
Accessories	A250TLL/T5, A500TLL/T5, A1000TLL/T5