Installation Instructions

Instrucciones de instalación, Instructions d'installation, Installationsanleitung, إرشادات التركيب ,
Installatie-instructies, Instruções de instalação, Installatie-instructies,
設置手順説明, **Οδηγίες εγκατάστασης**

Product Code:[AGAM/1/]

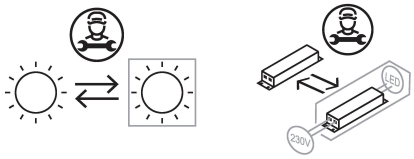

Master
Translations
QR Link

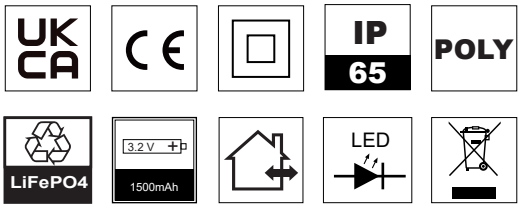

1

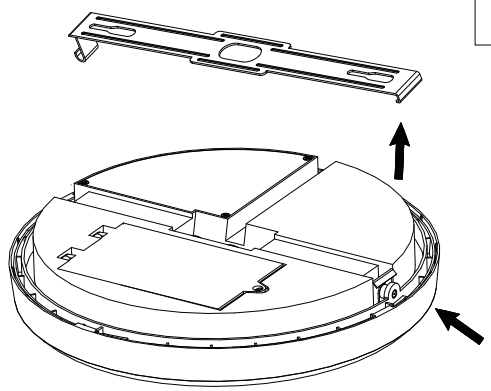

Press this switch to remove the mounting bracket

2

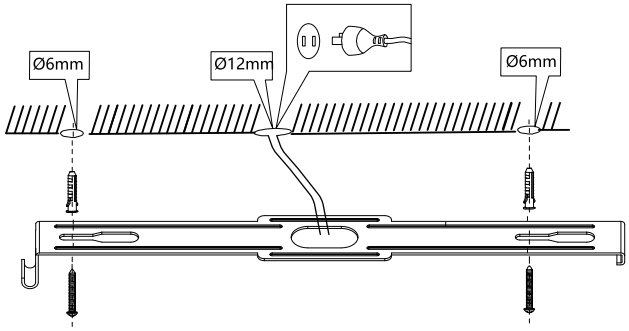

Fix the mounting bracket to the ceiling

3

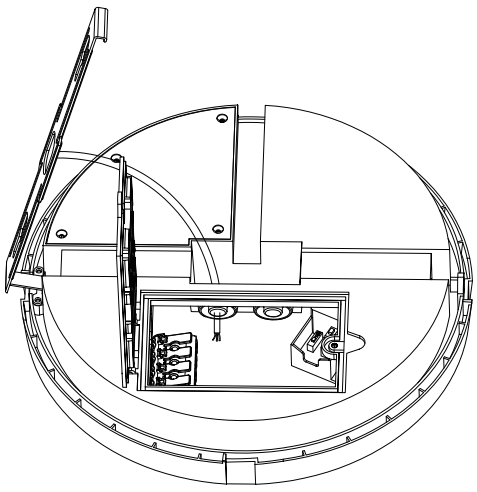

Open the cover to connect wiring

4

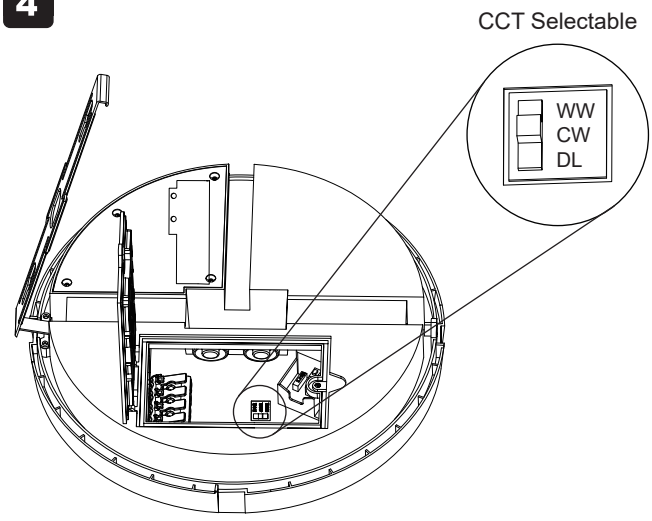

Ansell Electrical Products
Unit 6B, Stonecross Industrial Park,
Yew Tree Way,
Warrington,
WA3 3JD

Ansell (Sales & Distribution)
Unit 2, M2 Business Park,
Duncrue Street,
Belfast,
BT3 9AQ

Ansell (Sales & Distribution) Republic of Ireland Limited
Unit G1, Block G,
Calmount Park, Calmount Avenue
Dublin 12,
D12 TH56

www.ansell-lighting.com

Warrington Tel: +44 (0)1942 433333 Belfast Tel: +44 (0)2890 773750 International Tel: +44 (0)1942 433343 Spain Tel: 00 34 938 005642

Issue Number: [1]

5

Wiring Diagram

A.With emergency function

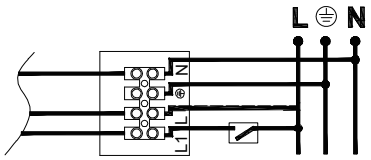

B.Without emergency function

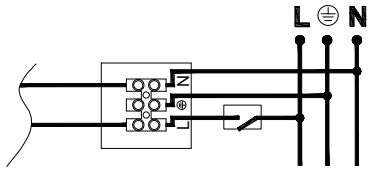

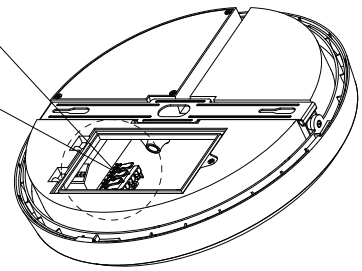

6

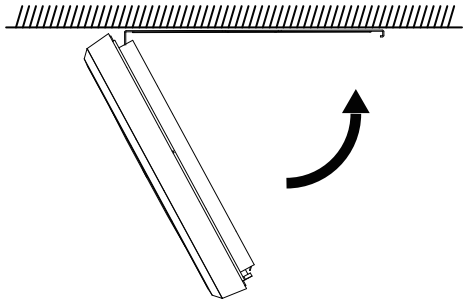

Hang the fitting on one end of the mounting bracket

7

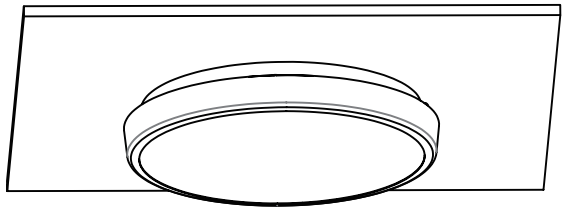



ON-OFF Setting

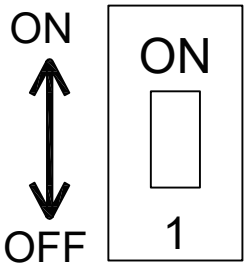

7W

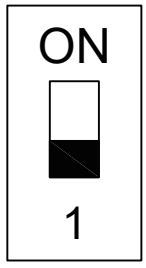

14W

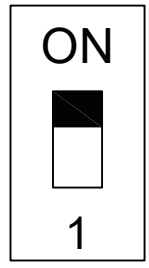

Ansell Electrical Products
Unit 6B, Stonecross Industrial Park,
Yew Tree Way,
Warrington,
WA3 3JD

Ansell (Sales & Distribution)
Unit 2, M2 Business Park,
Duncrue Street,
Belfast,
BT3 9AQ

Ansell (Sales & Distribution) Republic of Ireland Limited
Unit G1, Block G,
Calmount Park, Calmount Avenue
Dublin 12,
D12 TH56

www.ansell-lighting.com

Warrington Tel: +44 (0)1942 433333 Belfast Tel: +44 (0)2890 773750 International Tel: +44 (0)1942 433343 Spain Tel: 00 34 938 005642

Issue Number: [1]