Installation Instructions

Instrucciones de instalación, Instructions d'installation, Installationsanleitung, إرشادات التركيب ,
Installatie-instructies, Instruções de instalação, Installatie-instructies,
設置手順説明, **Οδηγίες εγκατάστασης**

Product Code:[AGAMMINI/1/]

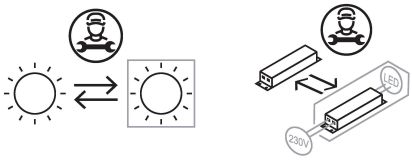

Master
Translations
QR Link

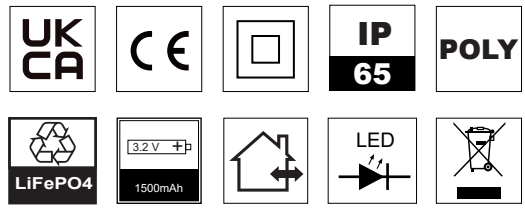

1



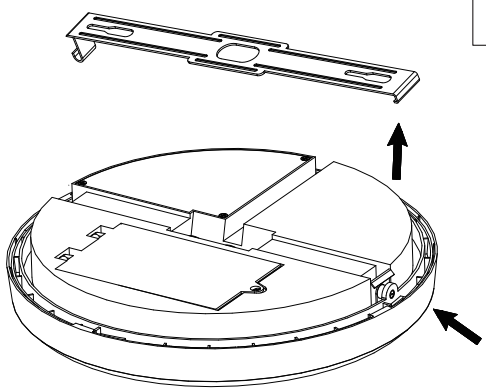

Press this switch to remove the mounting bracket

2

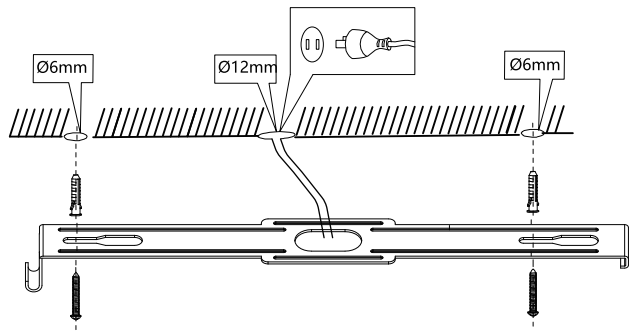

Fix the mounting bracket to the ceiling

3

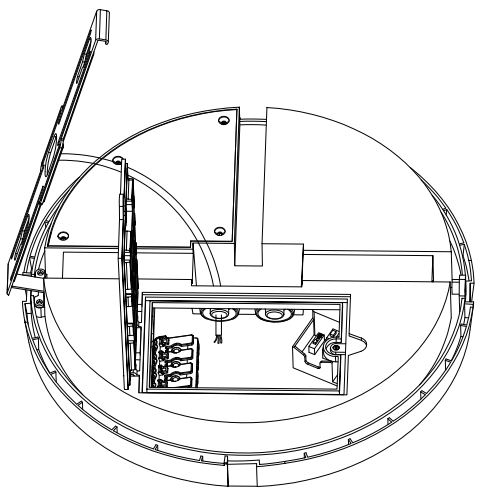

Open the cover to connect wiring

4

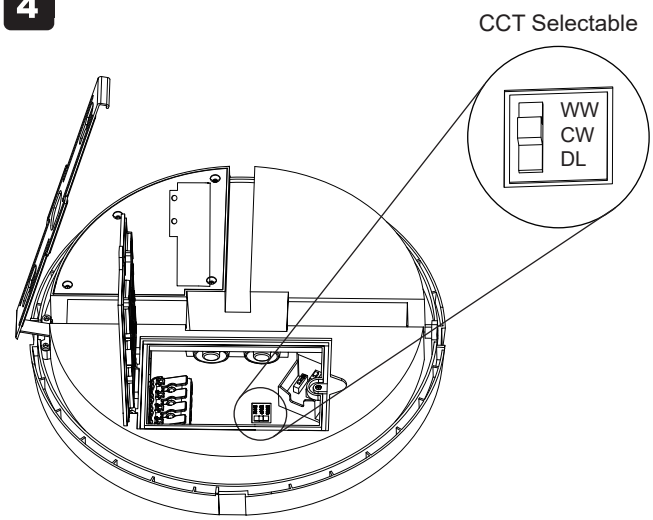

Ansell Electrical Products
Unit 6B, Stonecross Industrial Park,
Yew Tree Way,
Warrington,
WA3 3JD

Ansell (Sales & Distribution)
Unit 2, M2 Business Park,
Duncrue Street,
Belfast,
BT3 9AQ

Ansell (Sales & Distribution) Republic of Ireland Limited
Unit G1, Block G,
Calmount Park, Calmount Avenue
Dublin 12,
D12 TH56

www.ansell-lighting.com

Warrington Tel: +44 (0)1942 433333 Belfast Tel: +44 (0)2890 773750 International Tel: +44 (0)1942 433343 Spain Tel: 00 34 938 005642

Issue Number: [1]

5

Wiring Diagram

A.With emergency function

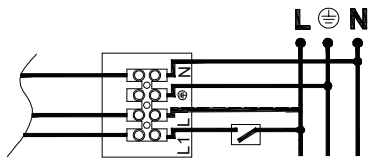

B.Without emergency function

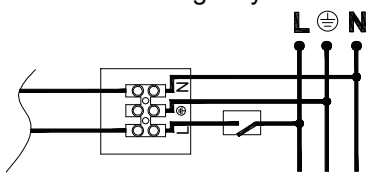

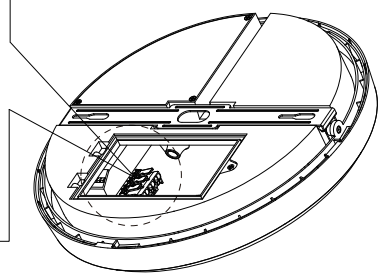

6

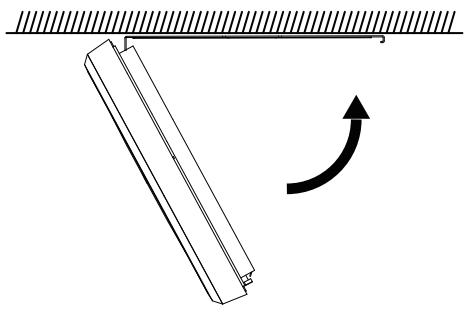

Hang the fitting on one end of the mounting bracket

7

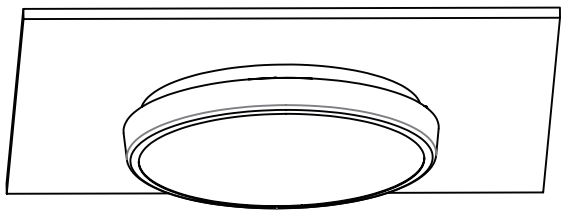

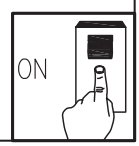

ON-OFF Setting

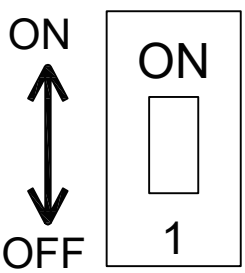

3W

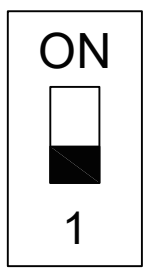

7W

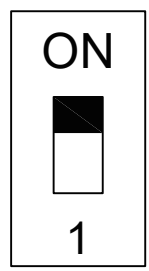

Ansell Electrical Products
Unit 6B, Stonecross Industrial Park,
Yew Tree Way,
Warrington,
WA3 3JD

Ansell (Sales & Distribution)
Unit 2, M2 Business Park,
Duncrue Street,
Belfast,
BT3 9AQ

Ansell (Sales & Distribution) Republic of Ireland Limited
Unit G1, Block G,
Calmount Park, Calmount Avenue
Dublin 12,
D12 TH56

www.ansell-lighting.com

Warrington Tel: +44 (0)1942 433333 Belfast Tel: +44 (0)2890 773750 International Tel: +44 (0)1942 433343 Spain Tel: 00 34 938 005642

Issue Number: [1]

/MWS Settings Instructions

1

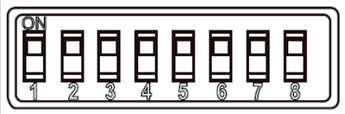

2 Detection Range



3 Hold Time

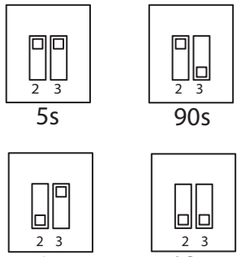

4 Daylight Sensor

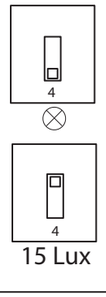

5 Stand-by Time

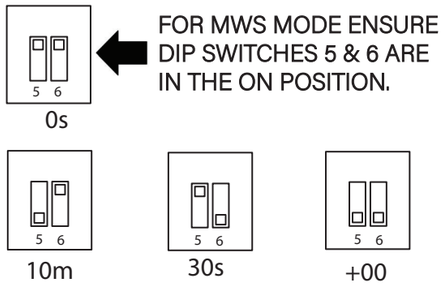

6 Sensor Mode

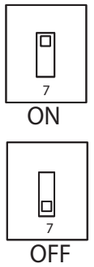

7 50% 10% Stand-by Light Level

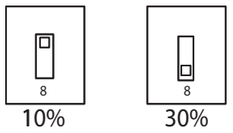

Note :
when used in the low output (3W)
do not use 10% setting,
Minimum is 30% stand-by time

SENSOR COVERAGE

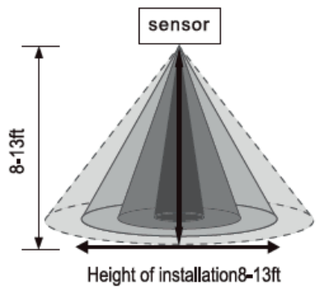

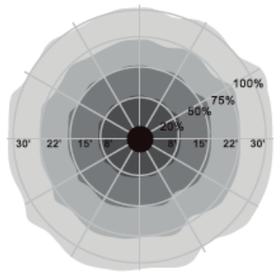

8 **Output current setting**

Output current 7 Options are optional. Set this parameter by the combination of (1,2,3,4) DIP switch up or DIP switch down. Dip switch mode (left).

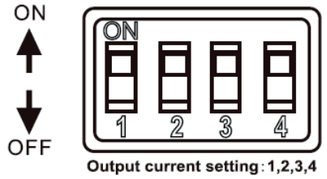

Output current

1	2	3	4	
↓	↓	↓	↓	55mA
↑	↓	↓	↓	150mA
↑	↑	↓	↓	350mA
↓	↓	↑	↓	400mA
↑	↓	↑	↓	480mA

WIRING DIAGRAMS

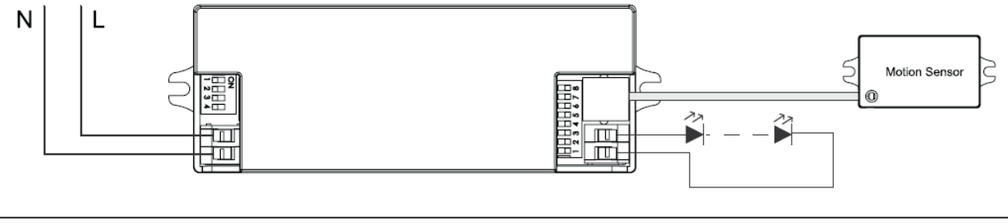

Mounting Height: 2,5 - 4m Max.
Microwave Frequency: 5.8GHz+/-75MHz
Microwave Power: <0.5mW
Detection Radius: 4m - 7m
Detection Angle: Ceiling 360°

ⓘ Detection is possible through doors, panels, glass and thin walls.

Ansell Electrical Products
Unit 6B, Stonecross Industrial Park,
Yew Tree Way,
Warrington,
WA3 3JD
Warrington Tel: +44 (0)1942 433333

Ansell (Sales & Distribution)
Unit 2, M2 Business Park,
Duncrue Street,
Belfast,
BT3 9AQ
Belfast Tel: +44 (0)2890 773750

Ansell (Sales & Distribution) Republic of Ireland Limited
Unit G1, Block G,
Calmount Park, Calmount Avenue
Dublin 12,
D12 TH56
International Tel: +44 (0)1942 433343

www.ansell-lighting.com
Spain Tel: 00 34 938 005642

Ansell Electrical Products
Unit 6B, Stonecross Industrial Park,
Yew Tree Way,
Warrington,
WA3 3JD
Warrington Tel: +44 (0)1942 433333

Ansell (Sales & Distribution)
Unit 2, M2 Business Park,
Duncrue Street,
Belfast,
BT3 9AQ
Belfast Tel: +44 (0)2890 773750

Ansell (Sales & Distribution) Republic of Ireland Limited
Unit G1, Block G,
Calmount Park, Calmount Avenue
Dublin 12,
D12 TH56
International Tel: +44 (0)1942 433343

www.ansell-lighting.com
Spain Tel: 00 34 938 005642

Issue Number: [1]