Low Profile Flexible G2 Ø75 mm with driver

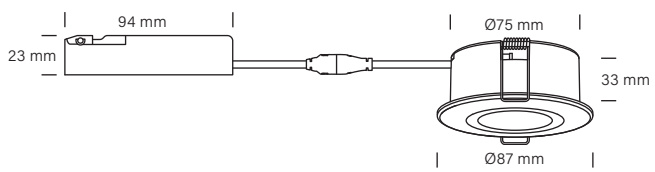

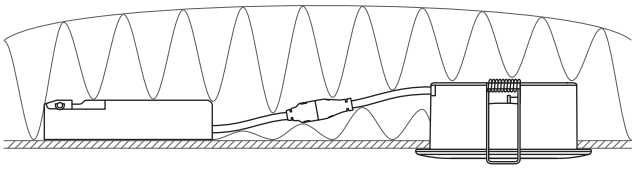

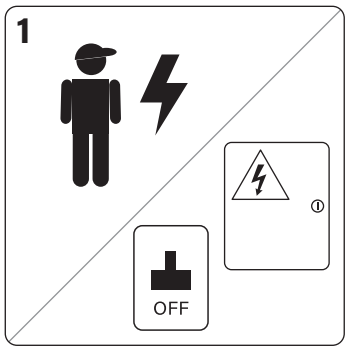



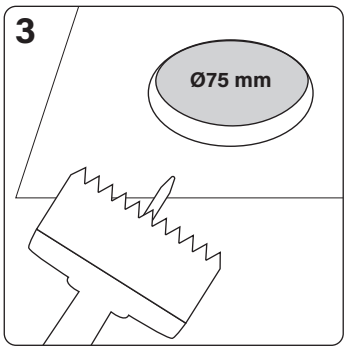

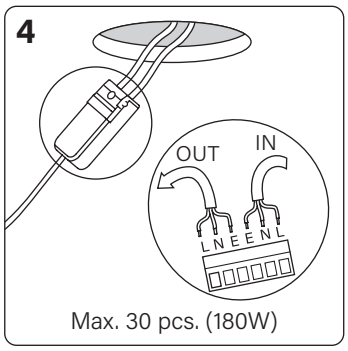

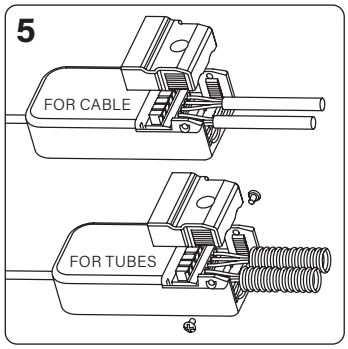

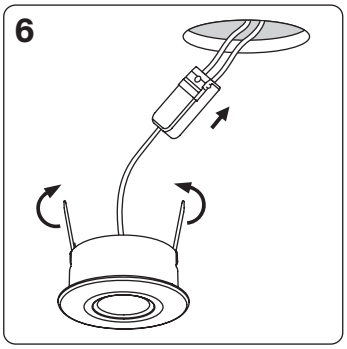

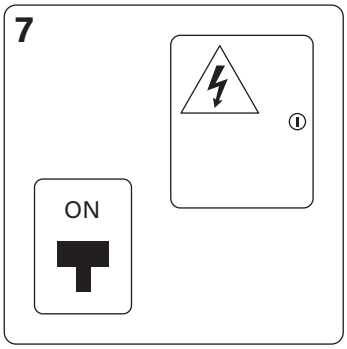

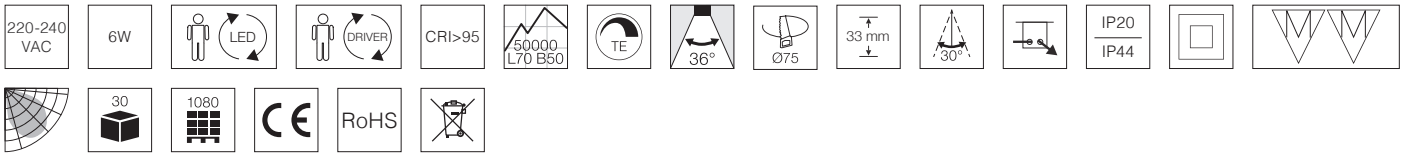

35711012-35711562 and 35711017-35711067: This product contains a light source in energy efficiency class F

35711013-35711563 and 35711014-35711564: This product contains a light source in energy efficiency class E

Find the updated manual on our website – nordtronic.com
With reservation for typing errors

Nordtronic A/S | Silovej 8, 12. sal | DK-9900 Frederikshavn | Denmark | CVR: 29808708
Tel: +45 7020 9531 | nordtronic.com

Manual
35711012-35711562, 35711013-35711563
35711014-35711564, 35711017-35711067 | 08-2026

Low Profile Flexible G2

