Palma

5|2 year warranty



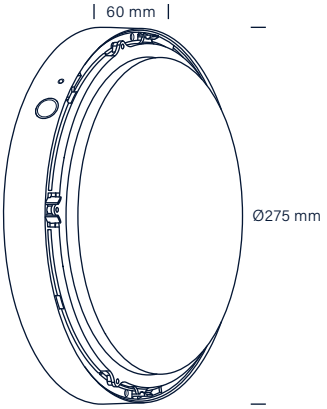

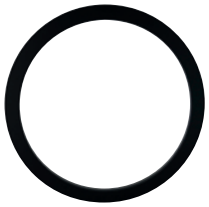



Technical data

Voltage	200-240 VAC 50/60 Hz
System effect	12W
Light source	10W LED, item no. 96000023 F
Colour temperature	3000 / 4000 Kelvin CCT switch
Light intensity, round cover	850 / 900 Lumen
Light intensity, eyelid cover	550 / 580 Lumen
Colour rendering	CRI>90
Expected lifespan	50,000 hours
Dimmable	No
Flicker free	Yes, according to the latest Ecodesign / ErP directive
SVM <0.4	Yes
PstLM <1	Yes
SDCM	One single LED <3
Beam angle	120°
Exterior dimensions	Ø275 mm, D: 60 mm
Possibility of through wiring	Ja, 2 x 3G1.5 mm²
IP rating	IP65
IK rating	IK10
Insulation class	Class II
Material	Polycarbonate
Environment	Indoors and outdoors
Warranty, product / surface	5 years / 2 years
Approvals	CE

Product information

- Flicker free according to the latest Ecodesign / ErP directive
- CCT switch 3000K / 4000K
- High colour rendering index – CRI>90

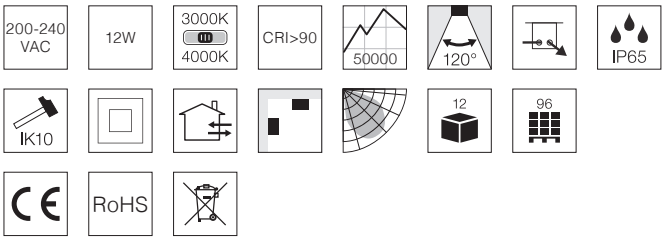

Item no.	EAN no.	Design, colour	Type
96102091	5704629002111	○ matt black (RAL 9005)	standard

Cover

Item no.	EAN no.	Type, design	Colour
96119099	5704629002135	cover, round	matt black (RAL 9005)
96129099	5704629002142	cover, eyelid	matt black (RAL 9005)

NB: Always use cables of a type approved for permanent installation according to the current legislation. If the cables are in contact with the lamp cover, use cables with an operating temperature of at least 70° C.

All rights reserved by Nordtronic A/S | Silovej 8, 12th floor | DK-9900 Frederikshavn | +45 7020 9531
Subject to printing errors.