# MAXI PROFIL

**600-eek205s**

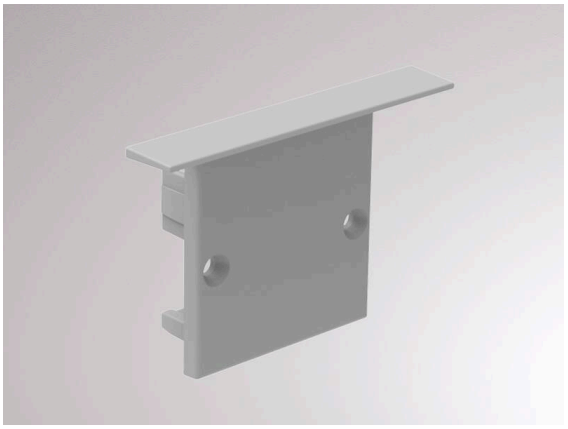

## TECHNICAL DETAILS

| | |
|---|---|
| Length [mm] | 6 |
| Width [mm] | 37 |
| Height [mm] | 25 |
| IP protection class | IP20 |
| Material | synthetic |
| Colour of body | grey |
| Net weight [kg] | 0.01 |
| EAN number | 9010506037548 |

Energy label

CE

The values are rated values. Power and luminous flux are initially subject to a tolerance of +/- 10%.
Colour temperature tolerance: +/- 150 K. The values apply to an ambient temperature of 25°C unless otherwise specified.