MAXI PROFIL

600-c205



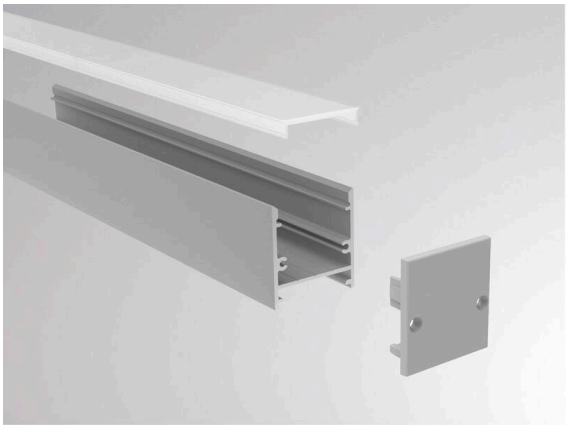

TECHNICAL DETAILS

Optics	PMMA diffuser
Length [mm]	2000
IP protection class	IP20
Material	synthetic
Colour of glass/shade	satined
Net weight [kg]	0.04
EAN number	9010506037678

Energy label

CE

The values are rated values. Power and luminous flux are initially subject to a tolerance of +/- 10%.
Colour temperature tolerance: +/- 150 K. The values apply to an ambient temperature of 25°C unless otherwise specified.