MAXI PROFIL

600-e205b

MAXI EINBAU LED STRIP PROFILE made of aluminium, black, similar to RAL 9005, IP20

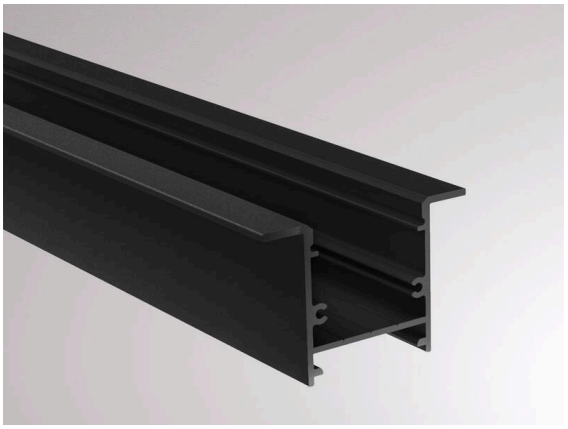

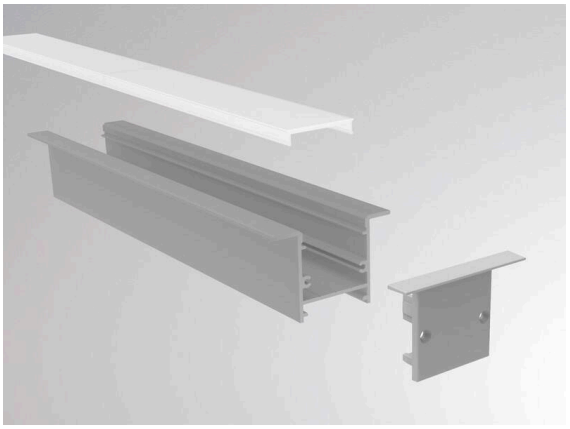

TECHNICAL DETAILS

Length [mm]	2000
Width [mm]	37
Height [mm]	25
Ceiling cutout [mm]	24mm x L-3mm
Mounting depth [mm]	30
IP protection class	IP20
Material	aluminium
Colour of body	black
RAL	9005
Net weight [kg]	0.66
EAN number	9010506028041

Energy label

CE

The values are rated values. Power and luminous flux are initially subject to a tolerance of +/- 10%.
Colour temperature tolerance: +/- 150 K. The values apply to an ambient temperature of 25°C unless otherwise specified.