Product Data Sheet

1131/CR/clear/oT/LED-M/5W-1xZ14

HNA standard light LED-M 5W, brass, cover clear without dropehole, IP56

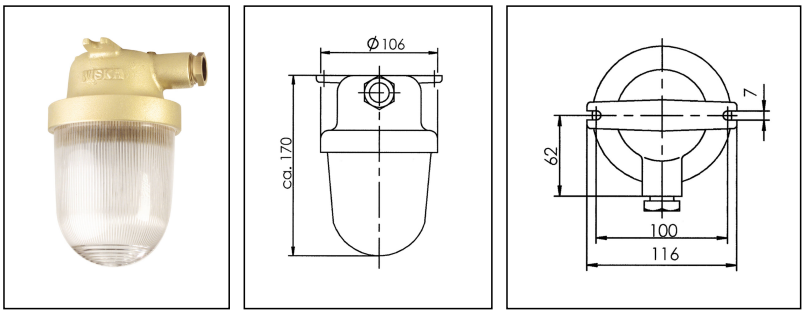

Products may differ in size, colour and appearance to those shown. If you require further information or customisation, please contact us directly.

WISKA-Order no.	10110592
Type	1131/CR/clear/oT/LED-M/5W-1xZ14
Material	Brass
Material globe/diffuser	Polycarbonate
Globe colour	Clear
Wattage	5 W
Voltage	230 V
Type of Voltage	AC
Protection class	IP56
Temp. range min	-25 °C
Temp. range max	45 °C
Lampholder	LED-M
Lightsource	LED
Lightsource incl.	Yes
Colour temperature	4000 K
Luminous flux	869 lm
Light colour	840 (cool white)
Rated Lifetime	L90/B10 @Ta +45 °C
System Lifetime	50000 h
Type of cable gland	M24x1,5 Z 14 / 12-14,5mm
Material cable gland	Brass
Using for cable gland	
Type of cable	armoured
Ø cable diameter min	12 mm
Ø cable diameter max	14,5 mm

Your Contact:
WISKA Hoppmann GmbH
Kisdorfer Weg 28 · 24568 Kaltenkirchen · Germany
☎ +49-4191-508-0 · 🖷 +49-4191-508-209
contact@wiska.de · www.wiska.com

Other technical data on request / subject to change without notice

Mounting	Upside down, Ceiling, Surface mounting
Equipment	without drope hole
External dimensions LxWxH	170x116mm
Weight	0,85 kg
Approval	RMRS, DNV-GL

Spare parts

SP-1931/CR/oT/clear	22000237
SP-1131 Gasket	22000863
SP-1131-2000 ST/LED 230Vac/840	22001154

26.11.2025

Your Contact:
WISKA Hoppmann GmbH
Kisdorfer Weg 28 · 24568 Kaltenkirchen · Germany
☎ +49-4191-508-0 · 🖷 +49-4191-508-209
contact@wiska.de · www.wiska.com

Other technical data on request / subject to change without notice

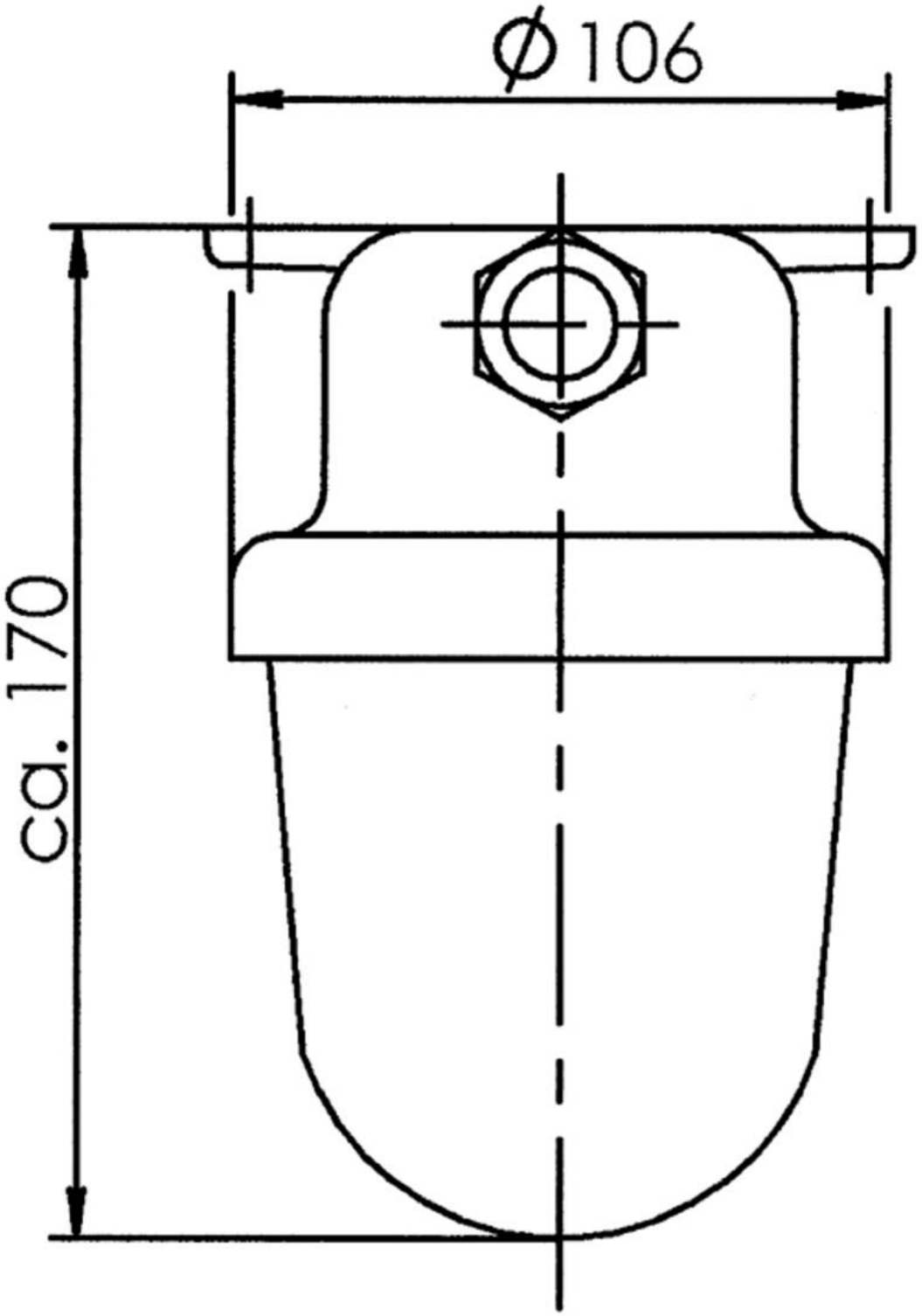

Your Contact:
WISKA Hoppmann GmbH
Kisdorfer Weg 28 · 24568 Kaltenkirchen · Germany
☎ +49-4191-508-0 · 🖷 +49-4191-508-209
contact@wiska.de · www.wiska.com

Other technical data on request / subject to change without notice

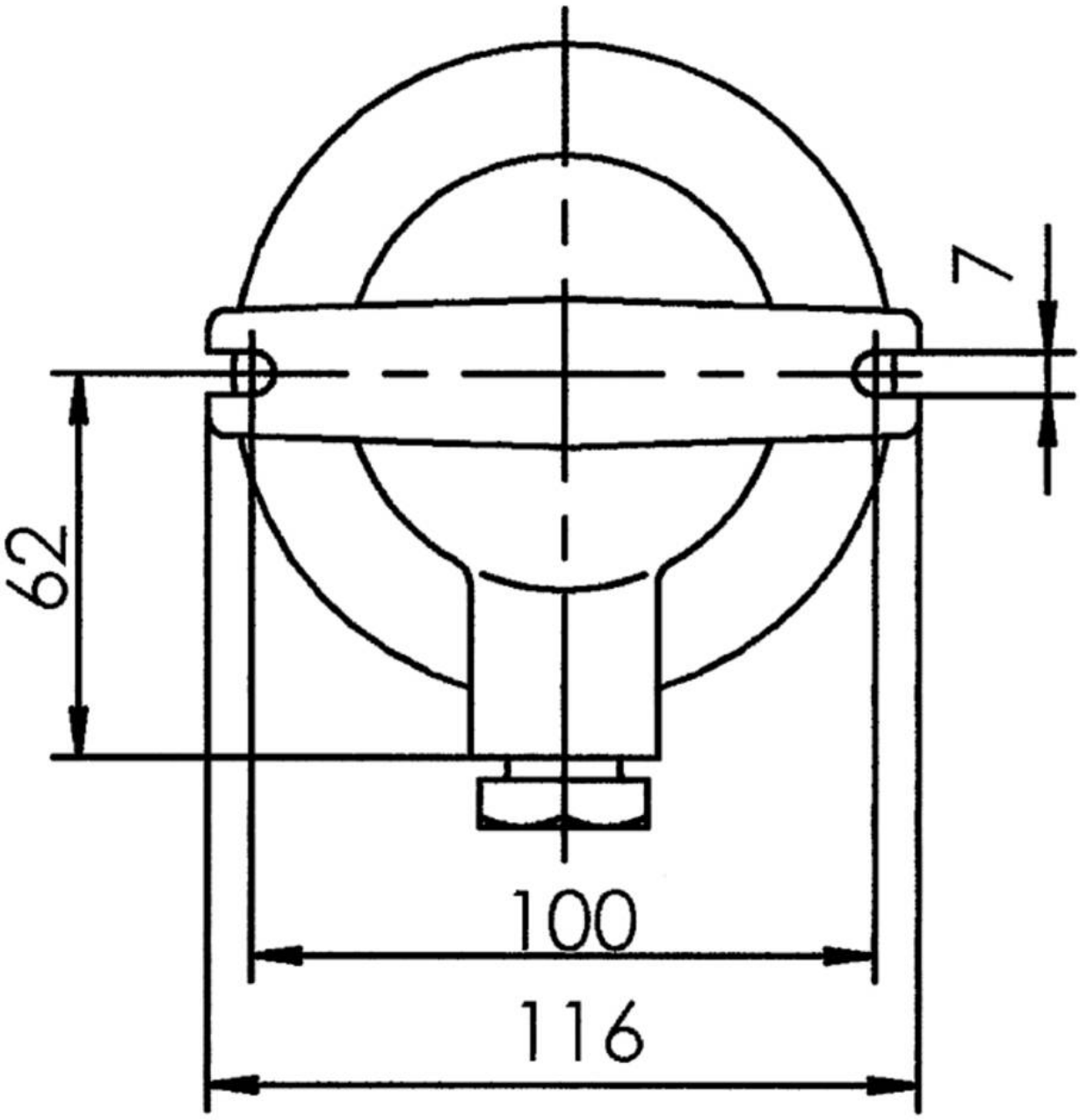

Your Contact:
WISKA Hoppmann GmbH
Kisdorfer Weg 28 · 24568 Kaltenkirchen · Germany
☎ +49-4191-508-0 · 🖷 +49-4191-508-209
contact@wiska.de · www.wiska.com

Other technical data on request / subject to change without notice