# 1131/CR/clear/mT/1974-1xZ14

HNA standard light max. 60W E27, brass, cover clear with dropehole, IP56

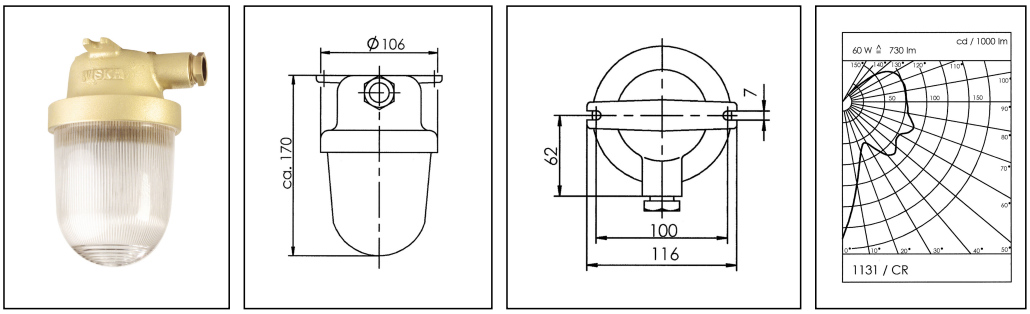


Products may differ in size, colour and appearance to those shown. If you require further information or customisation, please contact us directly.

| | |
|---|---|
| **WISKA-Order no.** | 10011508 |
| **Type** | 1131/CR/clear/mT/1974-1xZ14 |
| **Material** | Brass |
| **Material globe/diffuser** | Polycarbonate |
| **Globe colour** | Clear |
| **Wattage** | 60 W |
| **Voltage** | 230 V |
| **Type of Voltage** | AC |
| **Protection class** | IP56 |
| **Temp. range min** | -25 °C |
| **Temp. range max** | 45 °C |
| **Lampholder** | E27 |
| **Number of lampholder** | 1 ST |
| **Lightsource** | variable (E27) |
| **Lightsource incl.** | No |
| **Bulb shape** | Rod shaped |
| **Type of cable gland** | M24x1,5 Z 14 / 12-14,5mm |
| **Material cable gland** | Brass |
| **Using for cable gland** | |
| **Type of cable** | armoured |
| **Ø cable diameter min** | 12 mm |
| **Ø cable diameter max** | 14,5 mm |
| **Mounting** | Upside down, Ceiling, Surface mounting |
| **Equipment** | with drope hole |
| **External dimensions LxWxH** | 170x116mm |

Your Contact:
**WISKA Hoppmann GmbH**
Kisdorfer Weg 28 · 24568 Kaltenkirchen · Germany
☎ +49-4191-508-0 · 🖷 +49-4191-508-209
contact@wiska.de · www.wiska.com



Other technical data on request / subject to change without notice

| | |
|---|---|
| **Weight** | 0,9 kg |
| **Approval** | DNV-GL, RMRS |
| **Tariff number** | 94051990 |

**Recommended accessories**

| | |
|---|---|
| **SP-1112 Wall bracket 12mm** | 22000350 |
| **SP-Vibration damper light 1131** | 22000913 |

**Spare parts**

| | |
|---|---|
| **SP-1931/CR/mT/clear** | 22000290 |
| **SP-1189 Anti dazzle screen** | 22000534 |
| **SP-1131 Gasket** | 22000863 |
| **SP-Incandescent lamp 60W 230V E27** | 22000983 |
| **SP-1974 Lampholder E27, PPS, HNA** | 22001018 |

26.11.2025

Your Contact:
**WISKA Hoppmann GmbH**
Kisdorfer Weg 28 · 24568 Kaltenkirchen · Germany
☎ +49-4191-508-0 · 🖷 +49-4191-508-209
contact@wiska.de · www.wiska.com



Other technical data on request / subject to change without notice

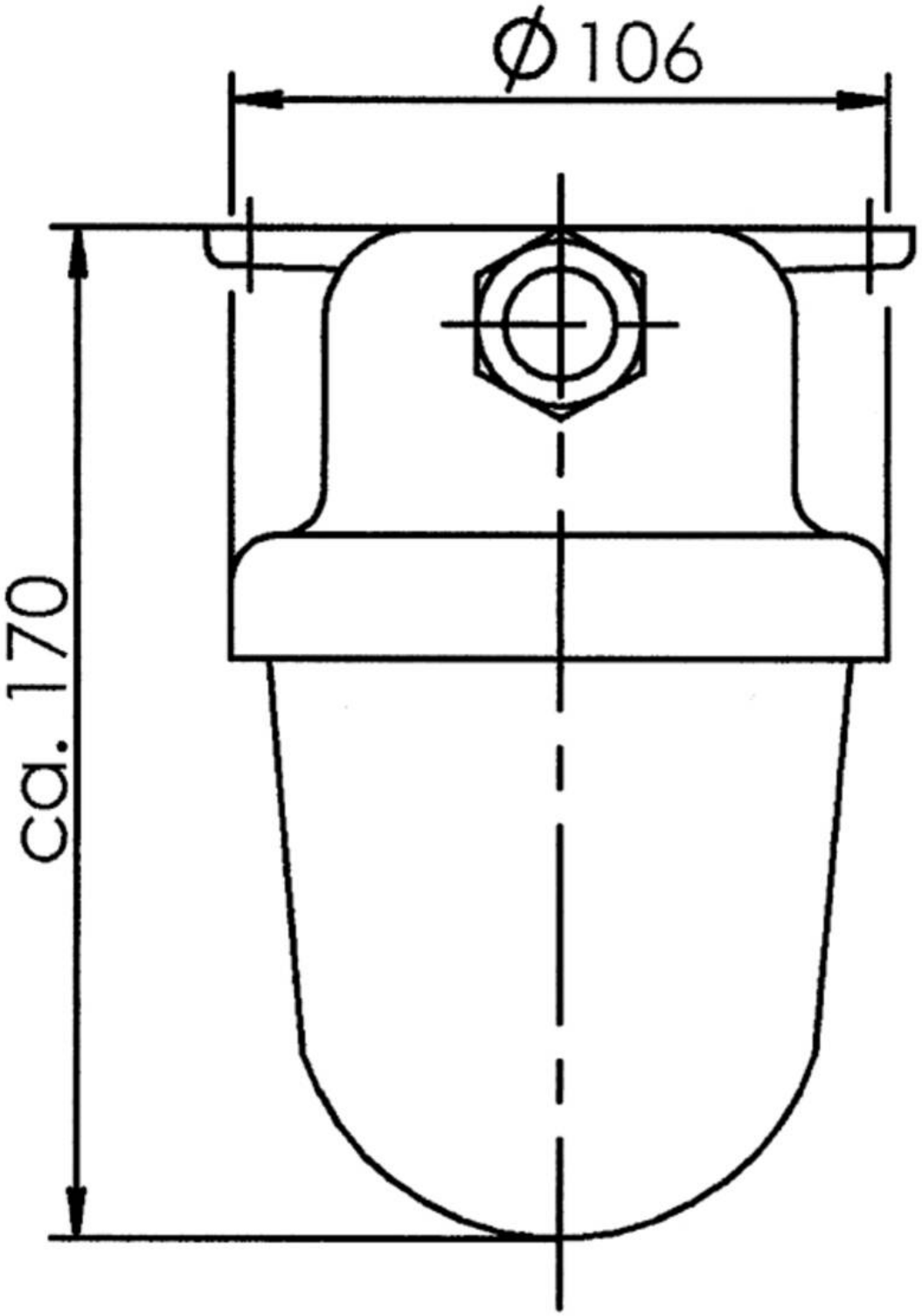


Your Contact:
**WISKA Hoppmann GmbH**
Kisdorfer Weg 28 · 24568 Kaltenkirchen · Germany
☎ +49-4191-508-0 · 🖷 +49-4191-508-209
contact@wiska.de · www.wiska.com



Other technical data on request / subject to change without notice

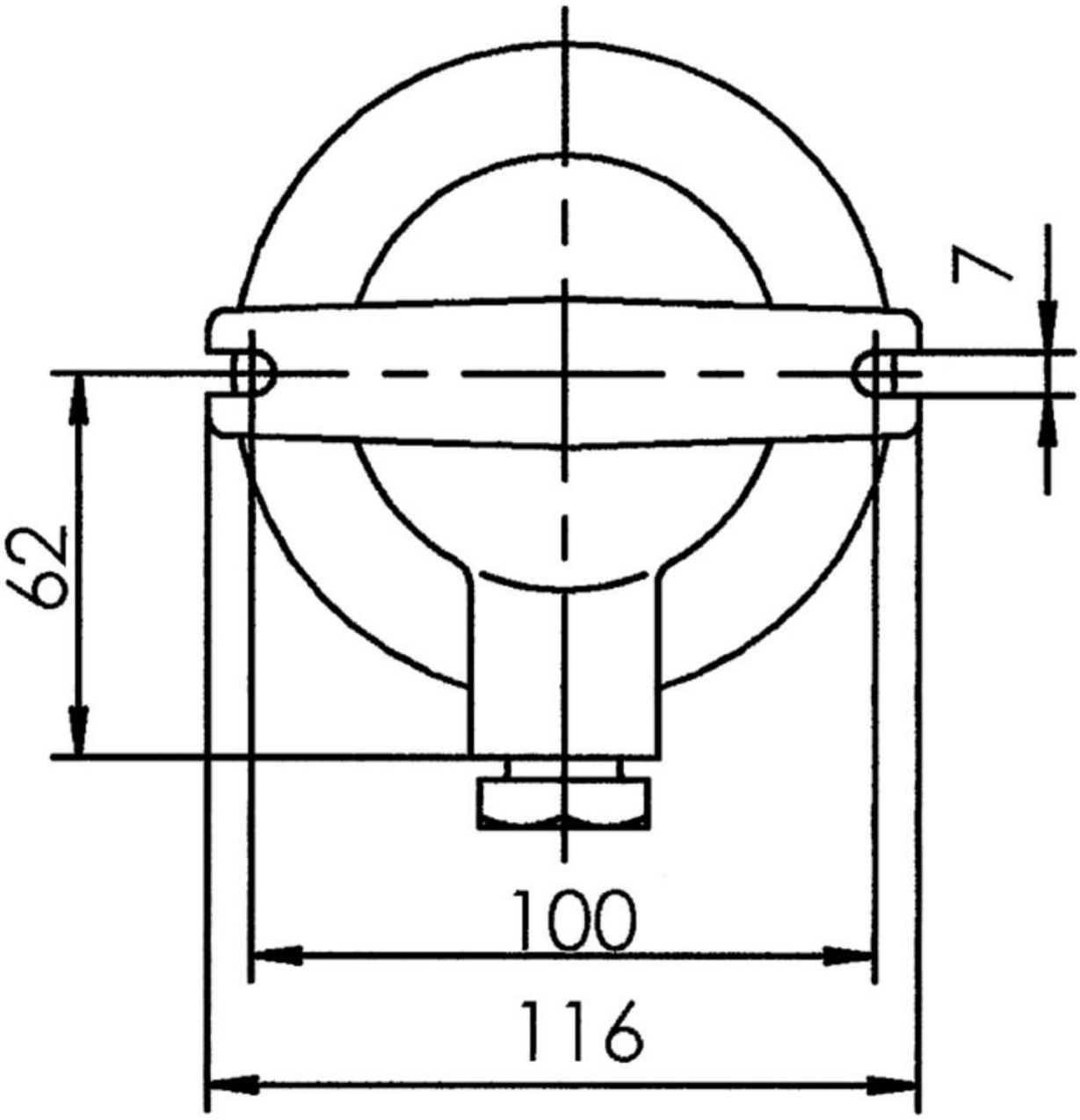


Your Contact:
**WISKA Hoppmann GmbH**
Kisdorfer Weg 28 · 24568 Kaltenkirchen · Germany
☎ +49-4191-508-0 · 🖷 +49-4191-508-209
contact@wiska.de · www.wiska.com



Other technical data on request / subject to change without notice

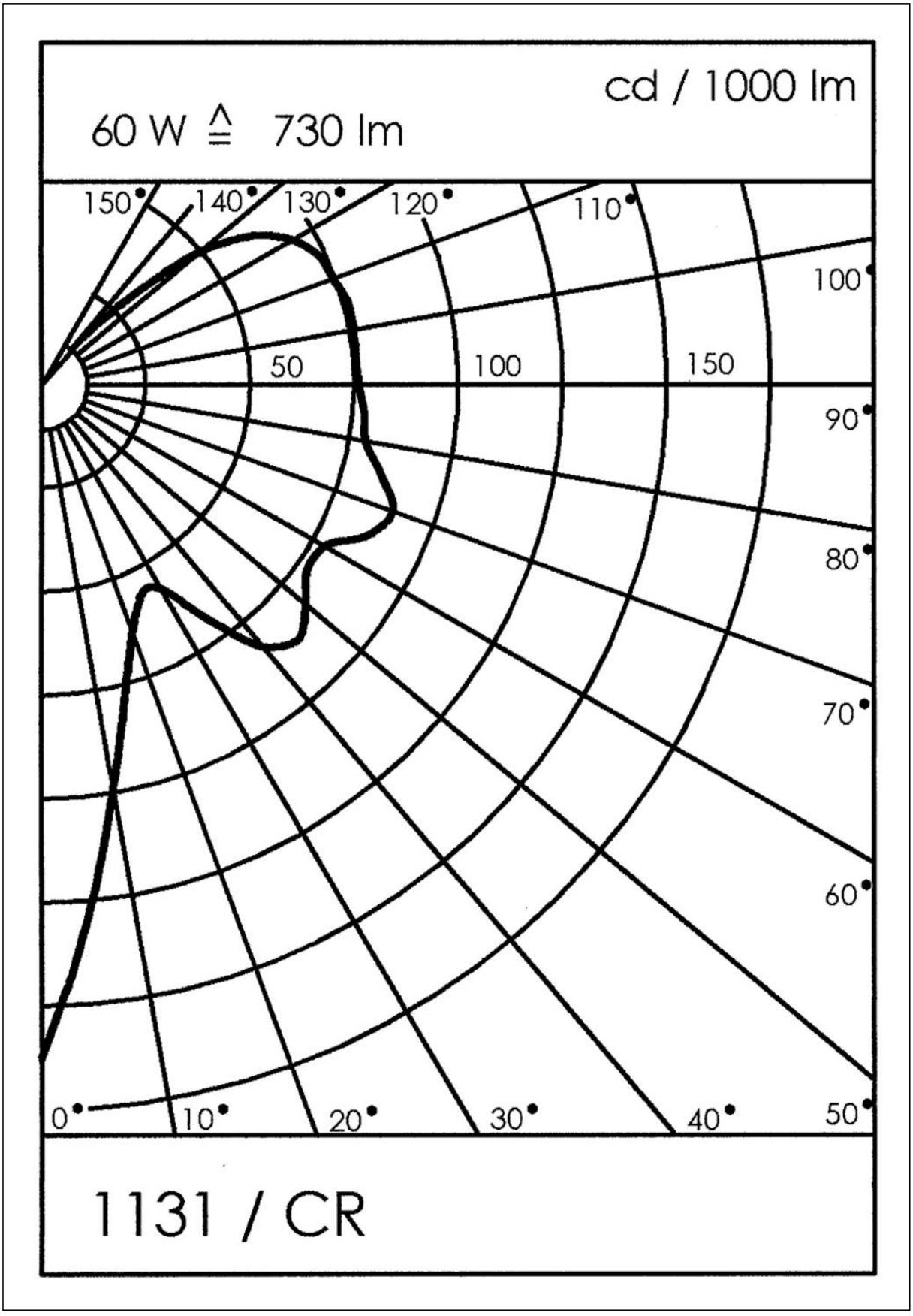


Your Contact:
**WISKA Hoppmann GmbH**
Kisdorfer Weg 28 · 24568 Kaltenkirchen · Germany
☎ +49-4191-508-0 · 🖷 +49-4191-508-209
contact@wiska.de · www.wiska.com



Other technical data on request / subject to change without notice