ENGLISH

Eaton 3S

Advanced User Guide



Copyright © 2019 **EATON**
All rights reserved.

614-09405-01_EN
3S EMEA

Special symbols

The following are examples of symbols used on the UPS or accessories to alert you to important information:



DANGEROUS VOLTAGE - Observe the warning associated with the risk of electric shock symbol.



Important instructions that must always be followed.



Information, advice, help.



Read the documentation provided.



Disconnect input plug.



This equipment should only be used in a dry indoor environment.



Operating range of temperature.



Operating range of humidity.



The UPS and their batteries must be kept in a ventilated place.

Contents

ENGLISH

1. Introduction 4

2. Presentation 5

3. Installation 6

3.1 Package contents 6
3.2 Recommended positions 6

4. Connection 7

4.1 Power supply cord / socket 7
4.2 Protected outlets / Backup & Protected outlets 7
4.3 Tel / xDSL surge protection (optional) 7
4.4 USB COM port (optional) 8
4.5 USB charging port (optional) 8
4.6 ON/OFF button 8
4.7 Register warranty 8

5. Operation 9

5.1 Battery charge 9
5.2 AC-power disturbance 9
5.3 Protected outlets 9
5.4 Equipment Care 9
5.5 Battery replacement 9

6. Troubleshooting 11

7. Service and support 12

8. Specification and technical characteristics 13

9. Glossary 14

1. Introduction

Thank you for selecting an Eaton product to protect your equipment.

The Eaton 3S range has been designed with the utmost care. We recommend that you take the time to read this advanced user guide and documentations provided to take full advantage of the many features of your UPS (Uninterruptible Power System).

Before installing your Eaton 3S, please read the information and safety instructions provided. Follow the instructions in the quick start guide and if necessary, refer to this advance user guide.

To discover the entire range of Eaton products, we invite you to visit our web site at eaton.com or contact your Eaton representative.

The Eaton 3S Uninterruptible Power System (UPS) is designed for computers and their peripherals, NAS, televisions, internet gateways, etc... It must not be used to supply other electrical equipment (lighting, heating, household appliances, etc.). It prevents your critical equipment from power problems such as power failures and power surges.

2. Presentation

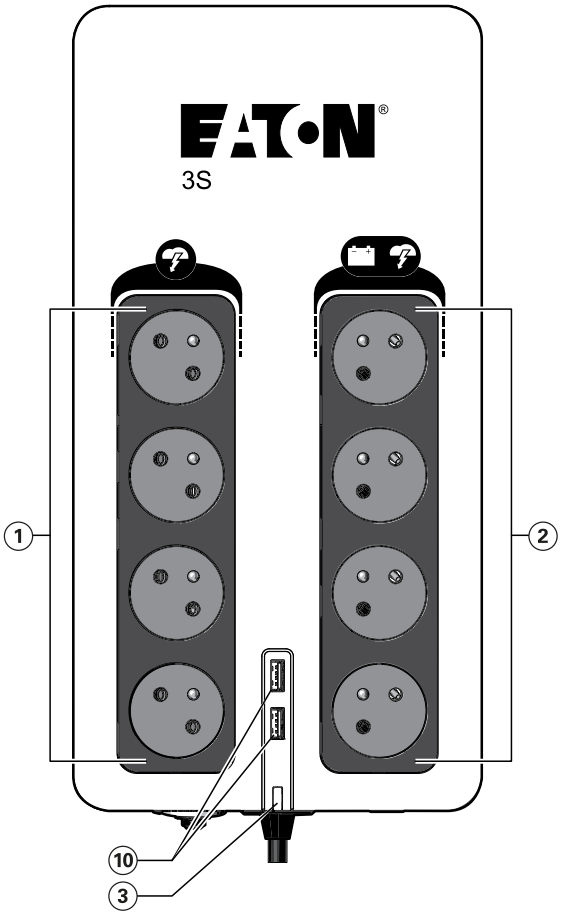

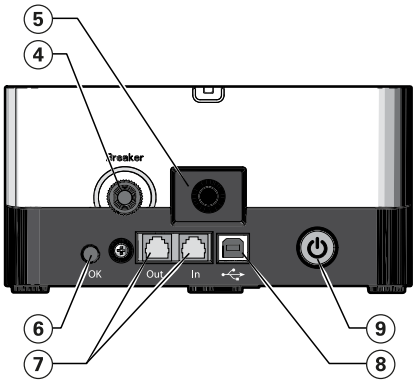

1. Protected outlets
2. Backup & Protected outlets
3. UPS status LED
4. Protection circuit breaker
5. Power supply cord / socket
6. Surge protection LED
7. Tel / xDSL surge protection (optional)
8. USB COM port (optional)
9. ON/OFF button
10. USB charging port (optional)

3. Installation

3.1 Package contents

⑪ Eaton 3S UPS
⑫ Quick start
⑬ Information and safety instruction
⑭ USB cable (for Eaton 3S with communication feature: 3S550, 3S700 and 3S850)
⑮ 2 x Output cables (IEC models only)

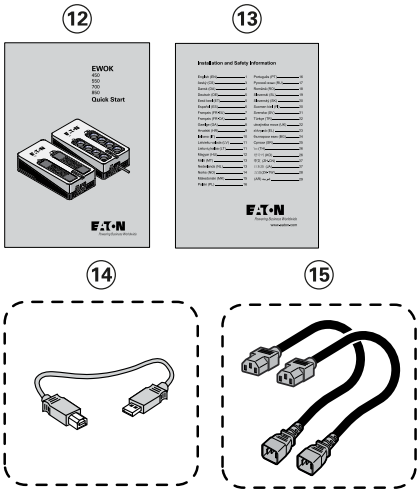

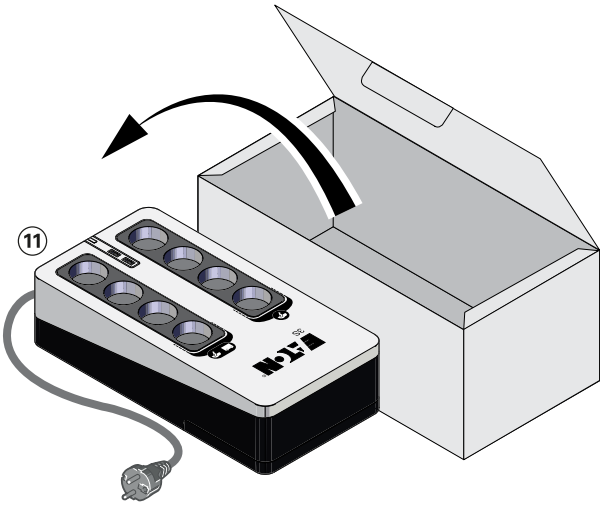

3.2 Recommended positions

Eaton 3S can be wall-mounted, horizontal or vertical position, the distance between screws are 230 mm for 3S450 / 3S550 models and 240mm for 3S700 / 3S850 models.

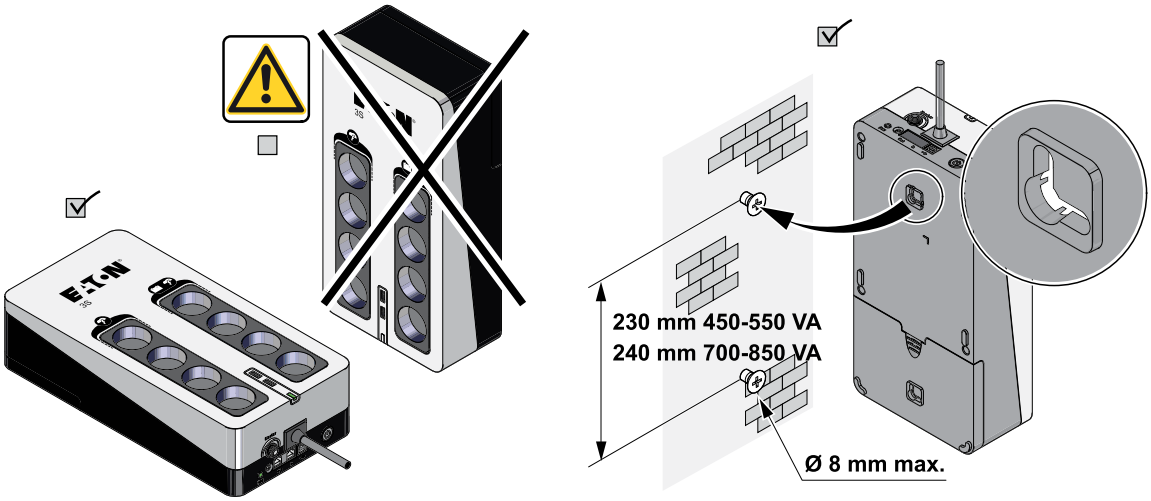

For 3S450 and 3S550 only do not dispose the product on the side as shown below.

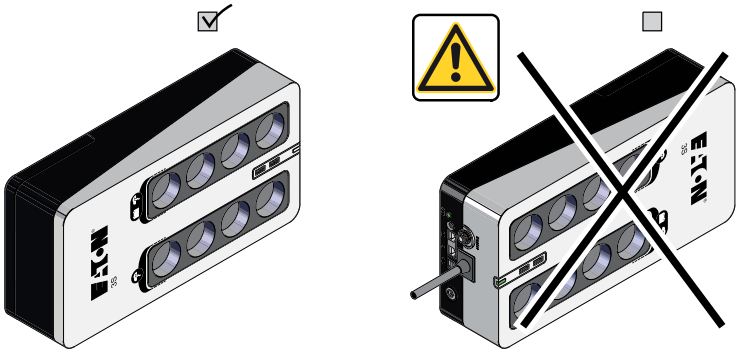

4. Connection

4.1 Power supply cord / socket

Connect the UPS to the AC-power source through a wall outlet equipped with an earth connector, using the attached cord for a UPS with FR / DIN sockets or the supply cord of your computer for a UPS with IEC sockets.

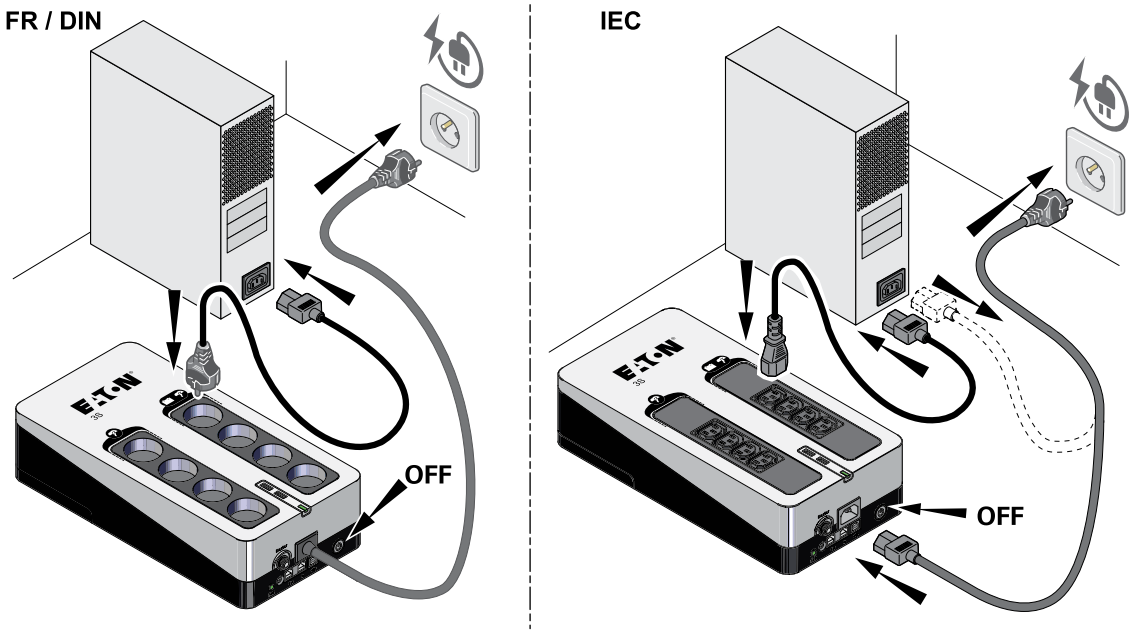

4.2 Protected outlets / Backup & Protected outlets

Plug critical equipment (computer, monitor, modem, etc.) to the backup & protected outlets ② providing battery backup power and surge protection, taking care not to exceed the rated current indicated in amperes. Other devices (printer, scanner, fax, etc.) can be connected to the protected outlets ① that provide surge protection only. The protected outlets are not backed up by battery power in the event of a power outage. Equipment connected to these outlets is supplied as soon as the AC cord is plugged in. These are not affected by ON/OFF button ⑨.

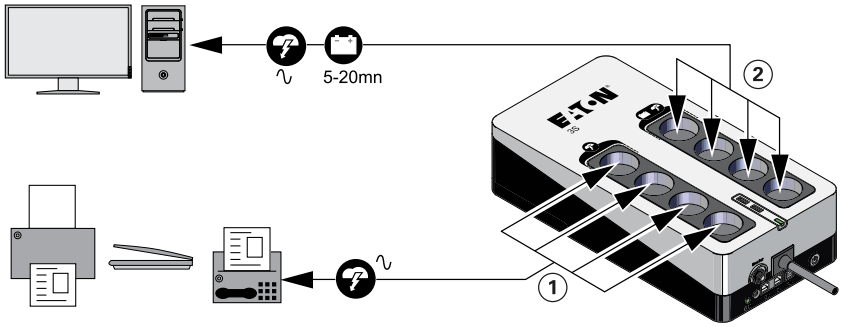

4.3 Tel / xDSL surge protection (optional)

Protect your Tel / xDSL line using a RJ11 cable (not provided) from the wall phone plug to the Eaton 3S "In" port ⑦ then connect your device to the Eaton 3S "Out" port ⑦.

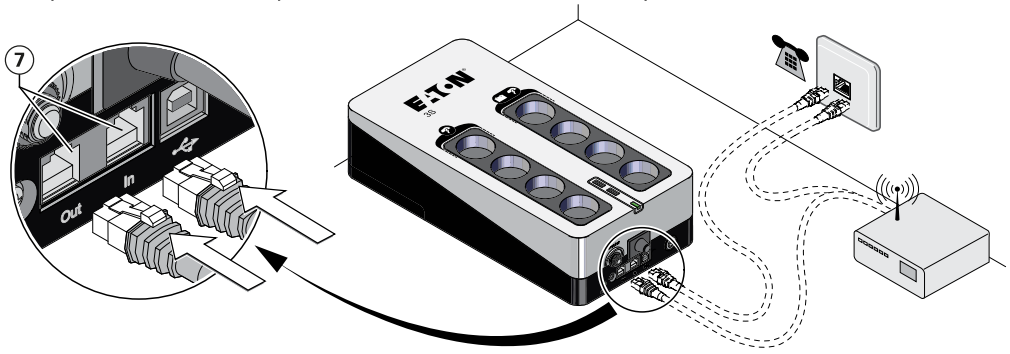

4. Connection

4.4 USB COM port (optional)

Connect the UPS to the computer using the USB cable ⑭ supplied.

Enhance your purchase by downloading the configuration tool software using URL :
HTTPS://powerquality.eaton.com/EMEA/support/software-drivers/default.asp

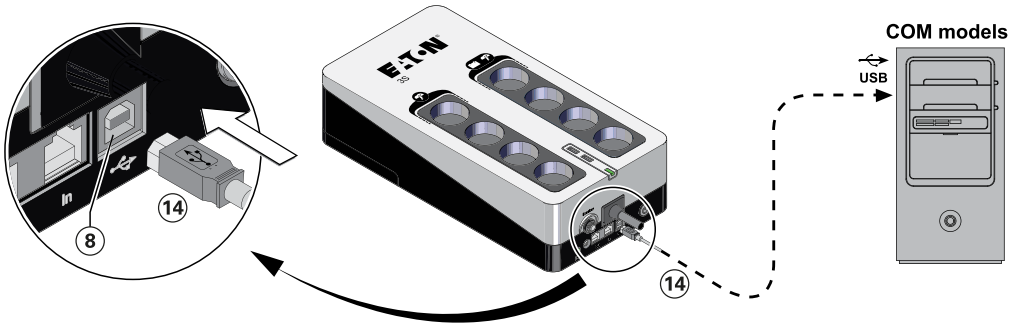

4.5 USB charging port (optional)

Connect your device to the USB charging port ⑩ (2A maximum).

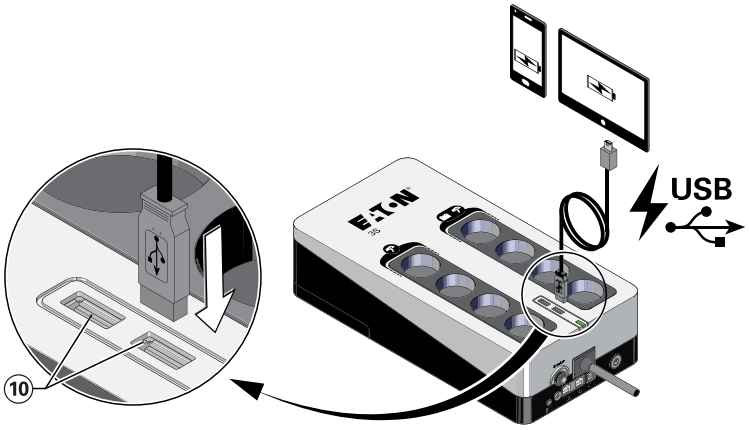

4.6 ON/OFF button

Switch on the UPS by pressing ON/OFF button ⑨ during 1.5 second.

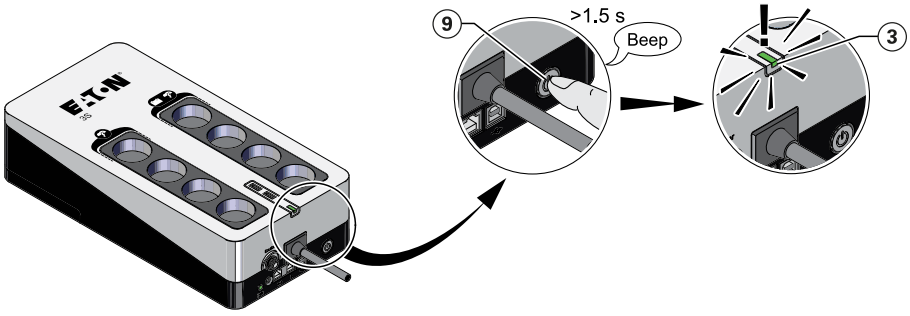

4.7 Register warranty

Register warranty at www.powerquality.eaton.com/EMEA/Product-Registration.

5. Operation

5.1 Battery charge

The UPS charges the battery as soon as it is connected to the AC outlet, whether ON/OFF button ⑨ is pressed or not. When used for the first time, the battery will only provide its maximum autonomy after it has been charged for 8 hours. It is recommended that the UPS be permanently connected to the AC power supply to ensure the best possible autonomy.

5.2 AC-power disturbance

If AC power is disturbed or fails, the UPS continues to operate on battery power. UPS status LED ③ flashes green. In normal mode, the audio alarm beeps every five seconds, then every two seconds when the end of battery backup time is near.

If the power outage lasts longer than the battery backup time, the UPS shuts down and automatically restarts when power is restored. Following a complete discharge, 10 hours are required to recharge the battery back to full backup time.

To save battery power, it is possible to press ON/OFF button ⑨ to cut the supply of power to the devices connected to the battery backup outlets.

5.3 Protected outlets

All protected outlets ① provide surge protection, whatever the position of ON/OFF button ⑨. The Surge protection LED ⑥ provide the status of the protection. When the Surge protection LED ⑥ is OFF your protection is defective, please contact after sales services or local representative.

5.4 Equipment Care

For full battery life, keep the equipment at an ambient temperature of 25 °C (77 °F). Battery service life is reduced by 50 % for every ten degrees above 25 °C.

If the UPS requires any type of transportation, verify that the UPS is turned off.

5.5 Battery replacement

For battery replacement follow Eaton instructions provided on www.eaton.eu/BatteryServices.

The following precautions should be observed when working on batteries:

- shut down the UPS (ON/OFF button ⑨),
-  disconnect the source prior to connecting or disconnecting battery terminals,
- do not wear any metal objects including watches and rings,
- do not lay tools or metal parts on top of batteries,
- it is imperative to use the same battery type and number.



CAUTION: Batteries present a risk of electrical shock or burn from high short circuit current. Observe proper precaution. Batteries may contain HIGH VOLTAGE and CORROSIVE, TOXIC and EXPLOSIVE substances. Because of the battery the output receptacles may carry high voltages even when the AC supply is not connected to the UPS. Do not dispose of batteries in a fire. When exposed to flame, batteries may explode. Do not open or mutilate the battery or batteries. Released electrolyte is harmful to the skin and eyes and may be extremely toxic.

5. Operation

Battery change :

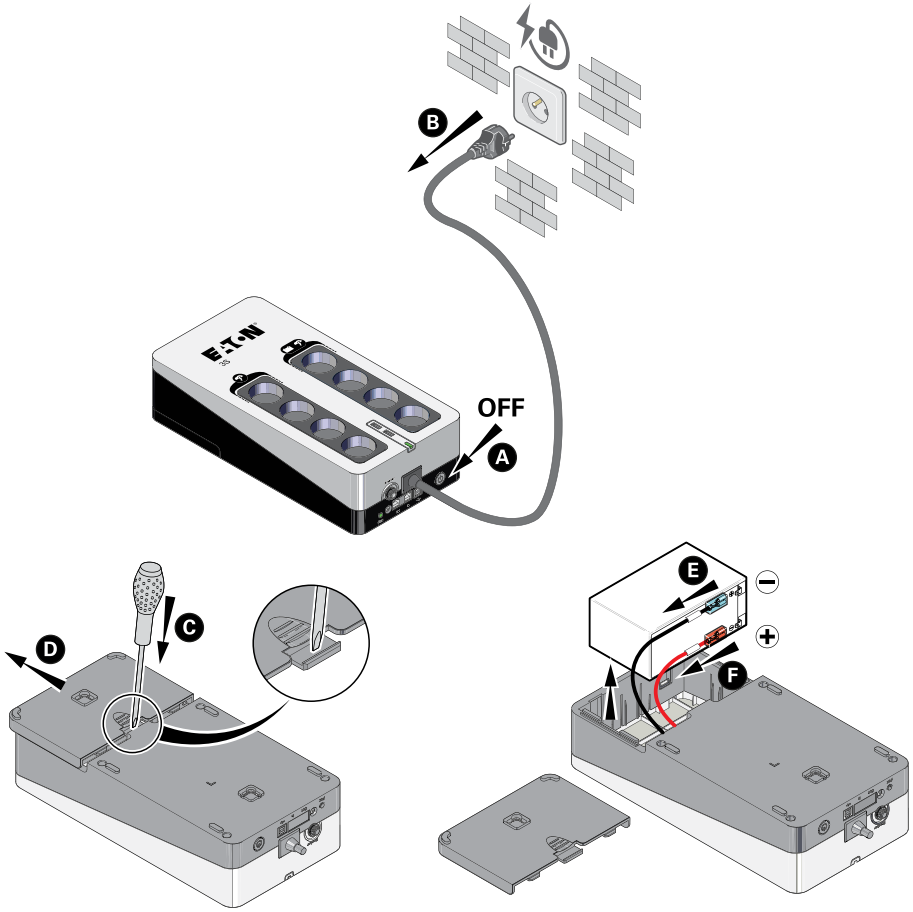

Warning: take care not to reverse the polarity + (red) and - (black) when connecting the batteries as this will destroy the device.

6. Troubleshooting

The Eaton 3S is designed for durable, automatic operation and alerts you whenever potential operating problem may occur.
The following table describes typical conditions:

Problem	Possible cause	Action
The battery backup outlets ② are not supplied with power.	ON/OFF Button ⑨ is not pressed.	Press ON/OFF button ⑨ **for 1.5 seconds** and check that LED ③ turns to green.
The connected devices are not supplied when AC power fails.	The devices are not connected to the battery backup outlets ②.	Connect the devices to the battery backup outlets ②.
AC power is available, but the UPS operates on battery power.	Circuit breaker ④ has been tripped by an overload on the UPS output.	Disconnect excess equipment and reset the circuit breaker ④ by pressing the corresponding button.
The filtered outlets ① and ② are not supplied.	The wall outlet is not supplied. Circuit breaker ④ has been tripped by an overload on the UPS output.	Supply power from the wall outlet. Disconnect excess equipment and reset the circuit breaker ④ by pressing the corresponding button.
Green LED ③ flashes every 1 second and audio alarm beeps every 5 seconds.	The UPS frequently operates on battery power because the AC power source is of poor quality.	Have the electrical installation checked by a professional or use another wall outlet.
Green LED ③ flashes every 1 second and audio alarm beeps every 1 second.	The UPS battery backup outlets ② are overloaded.	Disconnect excess equipment connected to the battery backup outlets.
Red LED ③ is on and the audio alarm beeps continuous.	A fault has occurred on the UPS. The battery backup outlets ② are no longer supplied.	Contact Eaton service and support.
The telephone line is disturbed or modem access is not possible. Surge protection LED ⑥ is OFF.	Surge protection on the telephone line is no longer provided.	Disconnect the telephone line from the wall outlet. Contact Eaton service and support.
USB communication fails.	Cable connection may be defective.	Re-connect the USB cable ⑭, if still not available Contact Eaton service and support.
USB charger ports ⑩ are not supplied.	The battery voltage is too low.	Recharge the battery, if still not available contact Eaton service and support.

7. Service and support

If you have any question or problem with the UPS, call Eaton or your local service representative in your country / region. Please have the following information ready when you call for service:

- model number,
- serial number,
- date of failure or problem,
- symptoms of failure or problem,
- customer return address and contact information,
- description of the installation.

8. Specification and technical characteristics

Eaton 3S	450	550	700	850
UPS power	450 VA / 270 W	550 VA / 330 W	700 VA / 420 W	850 VA / 510 W
Input mains voltage	220 - 240 V~ ; Ph + N + PE			
Input voltage range	184 - 264 V, adjustable to 160 - 284 V			
Input frequency	50 / 60 Hz (46 - 65 Hz working range)			
Input protection	10 A (thermal breaker)			
Output Voltage for backup outlets	220 V / 230 V / 240 V ~			
Output Current for backup outlets	2 A	2.4 A	3 A	3.7 A
Total output current for all outlets	9 A maximum			
Performance Classification	VFD SY 333			
Battery	12 V; 4.5 Ah	12 V; 5 Ah	12 V; 7 Ah	12 V; 9 Ah
Communication interface	NA	USB port (cable included)		
USB Charge	NA	NA	2 USB ports 2 A maximum	
Telephone surge protection	NA	NA	T3 Uoc = 6 kV; Up < 1.5 kV; In = 3 kA	
Power surge protection	T3 Uoc = 6 kV; Up < 1.5 kV; In = 3 kA			
Operating temperature	0 to 40 °C			
Storage temperature	-25 °C to +55 °C			
Operating relative humidity	Operating relative humidity 0 to 85 %			
Operating elevation	0 to 3000 m			
Compliances	IEC 62040-1; IEC 62040-2 C2*; IEC 62040-3; IEC 62040-4; IEC 61643-11 T3			
Conformity	CE / EAC / Ukr (DIN models) CE / Cm (FR models) CE / EAC / Cm / Ukr (IEC models)			
Warranty	2 years			
Weight	2.9 kg	3.2 kg	4 kg	4.3 kg
Dimensions	325 x 140 x 86 mm		335 x 170 x 86 mm	

***Note**:
The Eaton 3S is a IEC 62040-2 cat C2 UPS product. In a residential environment, this product may cause radio interference, in which case the user may be required to take additional measures. Output cables should not exceed 10 m length.

9. Glossary

Backup time	Time during which the load can be supplied by the UPS operating on battery power.
UPS	Uninterruptible Power Supply.