HK-K95-K150
H-K95/5
D-K95

10/92 AWA34-694

A HK-K95-K150

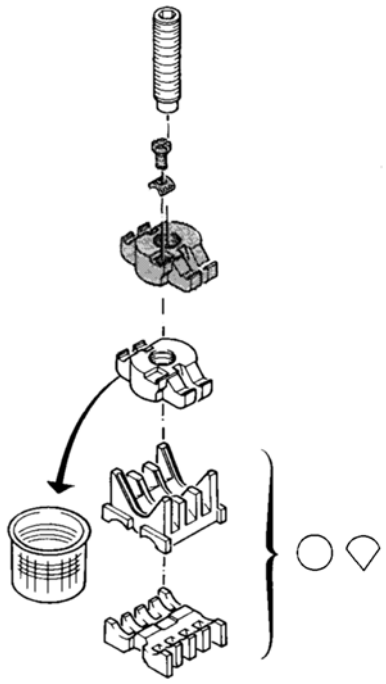

H-K95/5

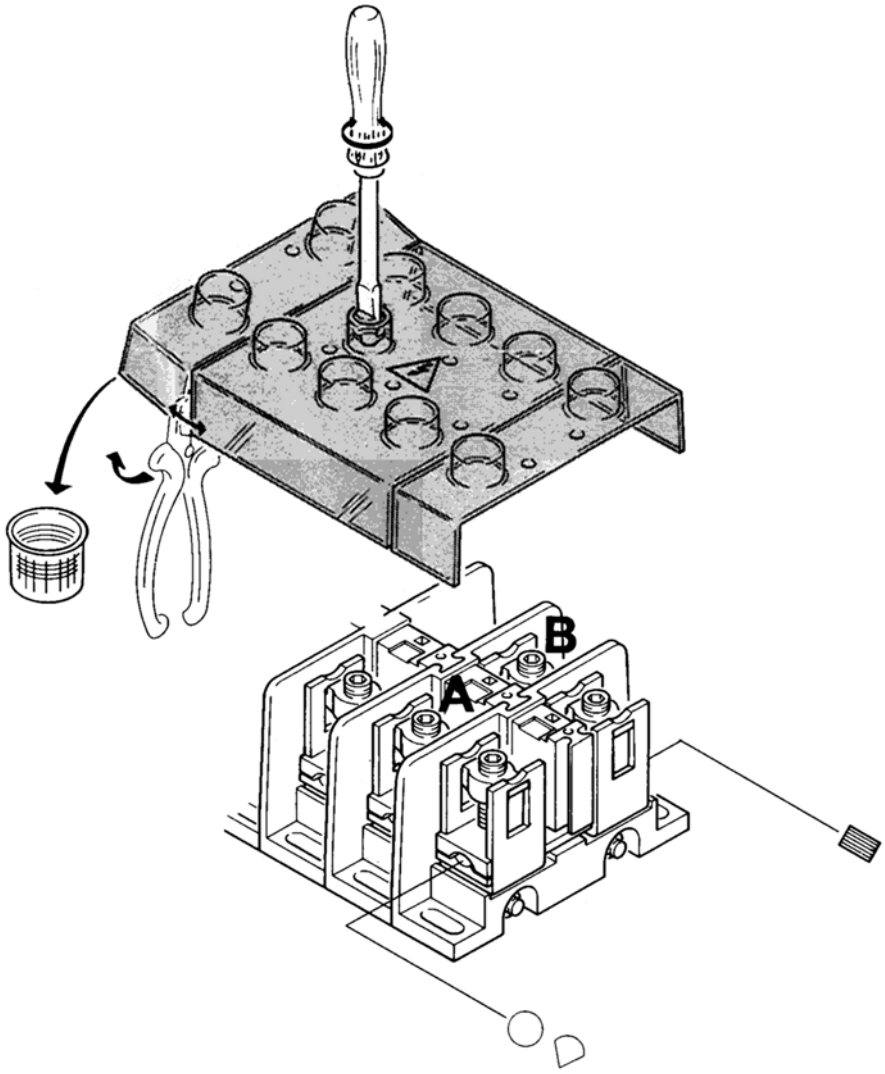

B HK-K95-K150

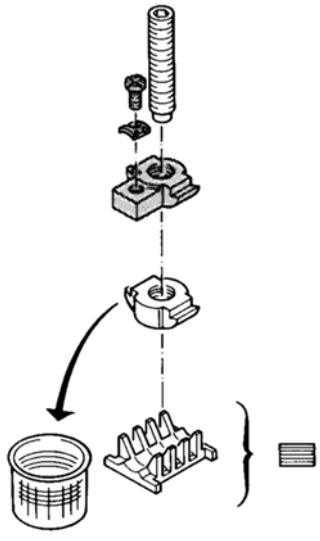

D-K95

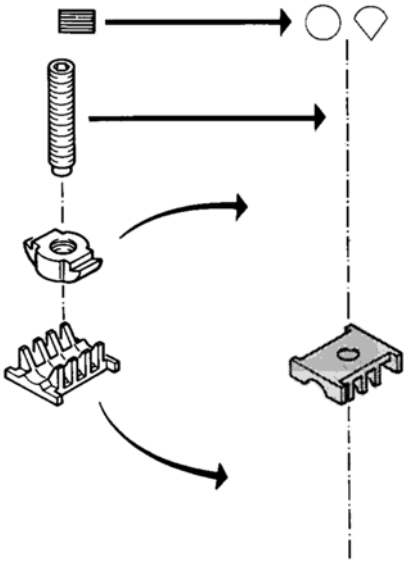

Eaton Industries GmbH, Hein-Moeller-Straße 7-11, D-53115 Bonn
© 1992 by Eaton Industries GmbH
Änderungen vorbehalten
10/92 AWA34-694
Printed in Germany (06/10)
DE05 DHW/DM