Specifications

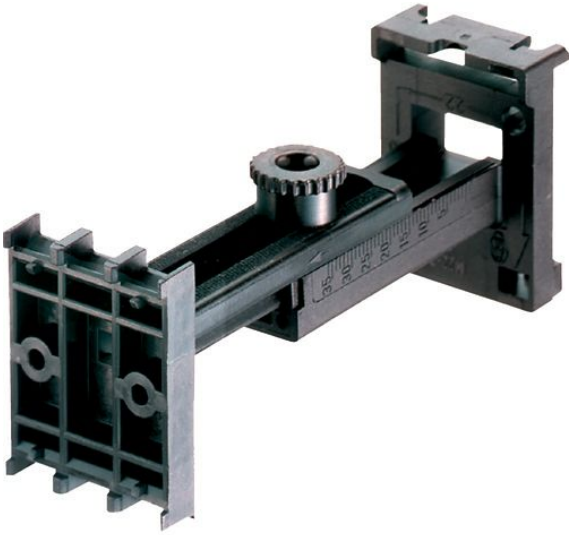

Eaton 216398

Eaton Moeller® series M22 Telescopic clip

General specifications	
PRODUCT NAME	Eaton Moeller® series M22 telescopic clip
CATALOG NUMBER	216398
MODEL CODE	M22-TC
EAN	4015082163983
PRODUCT LENGTH/DEPTH	80 mm
PRODUCT HEIGHT	40 mm
PRODUCT WIDTH	30 mm
PRODUCT WEIGHT	0.031 kg
COMPLIANCES	CE Marked
CERTIFICATIONS	IEC 60947-5 UL 508 EN 60947-5 CSA Std. C22.2 No. 14-05 CSA Std. C22.2 No. 94-91 CE CSA File No.: 012528 CSA-C22.2 No. 14-05 CSA Class No.: 3211-03 CSA-C22.2 No. 94-91 UL File No.: E29184 IEC/EN 60947-5 UL UL Category Control No.: NKCR CSA

Actuator

FITTED WITH:	Centering adapter
FUNCTIONS	For equalization of the mounting depth of rear mounting devices in CI enclosures, and in cabinets with mounting depths of 115 - 155 mm

Communication

CONNECTION TO SMARTWIRE-DT	No

Climatic environmental conditions

AMBIENT OPERATING TEMPERATURE - MAX	70 °C
AMBIENT OPERATING TEMPERATURE - MIN	-25 °C

Design verification

10.10 TEMPERATURE RISE	Not applicable.
10.11 SHORT-CIRCUIT RATING	Is the panel builder's responsibility. The specifications for the switchgear must be observed.
10.12 ELECTROMAGNETIC COMPATIBILITY	Is the panel builder's responsibility. The specifications for the switchgear must be observed.
10.13 MECHANICAL FUNCTION	The device meets the requirements, provided the information in the instruction leaflet (IL) is observed.
10.2.2 CORROSION RESISTANCE	Meets the product standard's requirements.
10.2.3.1 VERIFICATION OF THERMAL STABILITY OF ENCLOSURES	Meets the product standard's requirements.
10.2.3.2 VERIFICATION OF RESISTANCE OF INSULATING MATERIALS TO NORMAL HEAT	Meets the product standard's requirements.
10.2.3.3 RESIST. OF INSUL. MAT. TO ABNORMAL HEAT/FIRE BY INTERNAL ELECT. EFFECTS	Meets the product standard's requirements.
10.2.4 RESISTANCE TO ULTRA-VIOLET (UV) RADIATION	Please enquire
10.2.5 LIFTING	Does not apply, since the entire switchgear needs to be evaluated.
10.2.6 MECHANICAL IMPACT	Does not apply, since the entire switchgear needs to be evaluated.
10.2.7 INSCRIPTIONS	Meets the product standard's requirements.
10.3 DEGREE OF PROTECTION OF ASSEMBLIES	Does not apply, since the entire switchgear needs to be evaluated.
10.4 CLEARANCES AND CREEPAGE DISTANCES	Meets the product standard's requirements.
10.5 PROTECTION AGAINST ELECTRIC SHOCK	Does not apply, since the entire switchgear needs to be evaluated.
10.6 INCORPORATION OF	Does not apply, since the

SWITCHING DEVICES AND COMPONENTS	entire switchgear needs to be evaluated.
10.7 INTERNAL ELECTRICAL CIRCUITS AND CONNECTIONS	Is the panel builder's responsibility.
10.8 CONNECTIONS FOR EXTERNAL CONDUCTORS	Is the panel builder's responsibility.
10.9.2 POWER-FREQUENCY ELECTRIC STRENGTH	Is the panel builder's responsibility.
10.9.3 IMPULSE WITHSTAND VOLTAGE	Is the panel builder's responsibility.
10.9.4 TESTING OF ENCLOSURES MADE OF INSULATING MATERIAL	Is the panel builder's responsibility.
EQUIPMENT HEAT DISSIPATION, CURRENT-DEPENDENT PVID	0 W
HEAT DISSIPATION CAPACITY PDISS	0 W
HEAT DISSIPATION PER POLE, CURRENT-DEPENDENT PVID	0 W
RATED OPERATIONAL CURRENT FOR SPECIFIED HEAT DISSIPATION (IN)	0 A
STATIC HEAT DISSIPATION, NON-CURRENT-DEPENDENT PVS	0 W

General information

ACCESSORY/SPARE PART TYPE	Accessory
PRODUCT CATEGORY	Accessories

Resources

CATALOGUES	eaton-pushbuttons-signal-towers-sensors-assortment-overview-catalog-ca047003en-en-us.pdf
DRAWINGS	eaton-operating-indication-m22-indicator-light-dimensions-002.eps eaton-operating-m22-indicator-light-dimensions.eps eaton-operating-m22-telescopic-clip-dimensions.eps eaton-operating-telescopic-clip-m22-telescopic-clip-3d-drawing.eps
INSTALLATION INSTRUCTIONS	IL047160022
MCAD MODEL	eaton-accessory-mcad-drawings-teleskop-clip.dwg DA-CS-teleskop_clip

PROJECT NAME:	
PROJECT NUMBER:	
PREPARED BY:	
DATE:	

Eaton Corporation plc Eaton House
30 Pembroke Road
Dublin 4, Ireland
Eaton.com

© 2026 Eaton. All Rights Reserved.

Follow us on social media to get the latest product and support information.