

# The RMQ Titan M22-RJ45-CAT6A panel mount connector

### Compelling all around

The M22-RJ45-CAT6A panel mount connector provides reliable and easy access to the technology inside the control cabinet. This RJ45 socket significantly simplifies the configuration and programming of the control cabinets.

### Powerful

The M22-RJ45 boasts a high degree of protection (IP65) and an ambient temperature range of -25°C to +70°C. Its improved shielding and greater power reserves make it the perfect extension of our existing M22-RJ45-SA interface.

The M22-RJ45-CAT6A supports transmission frequencies of up to 500 MHz, which enables Ethernet applications up to 10 Gigabit.

### Features

The developments of Industry 4.0 confirm the need for such an interface. At a time when ever higher operating frequencies are required, the M22-RJ45-CAT6A can handle Ethernet speeds of up to 10 Gigabit and thus makes for the perfect addition to modern control cabinets.

### Compatibility

The panel mount connector has been designed for Cat. 6A, but is also backward compatible with existing categories such as Cat. 5e.

### Design

The M22-RJ45-CAT6A fits seamlessly into our RMQ-Titan range and can be easily integrated into a wide range of applications.



EATON
*Powering Business Worldwide*

# At a glance

## Technical data

- Degree of protection: IP65 (when the protective flap is closed)
- Transmission frequencies up to 500 MHz
- Supports Ethernet applications up to 10 Gigabit
- Ambient air temperature range: -25°C bis +70°C
- Backward compatible with existing categories (i.e. Cat. 5e)



## Upgrades compared to the previous version

- Improved shielding
- Less sensitive to faults
- Greater power reserves
- Higher bandwidth and transmission frequency

## Design

- Mounting diameter: 22.5 mm
- Seamless integration into existing systems and applications

| | | |
|---|---|---|
| **RJ45 8/8 socket, Cat. 6A** | **Designation:**<br>**Art. NR.:** | M22-RJ45-CAT6A<br>400122 |
| **Degree of protection** | IP65 (when the flap is closed)<br>IP20 (when a connector is plugged in) | |
| **Bezel** | Silver bezel | |
| **Wiring diagram/contact assignment** | 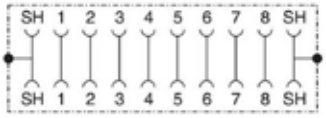 | |
| **Product standards** | UL 508; CSA-C22.2 No. 142; CE marking | |
| | IEC: IP65 and UL/CSA NEMA Type 2, 3R, 4, 4X, 12, 13 when the flap is closed, IP20 when a connector is plugged in | |

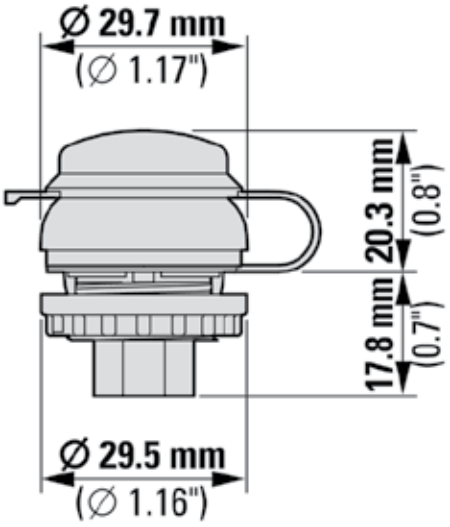


For more information, please refer to our **online catalog**

**Eaton Industries GmbH**
Hein-Moeller-Str. 7–11
D-53115 Bonn/Germany
Eaton.com

© 2021 Eaton
All Rights Reserved
Publication No. FL047006EN
December 2021

Changes to the products, to the information contained in this document, and to prices are reserved; as are errors and omissions. Only order confirmations and technical documentation by Eaton is binding. Photos and pictures also do not warrant a specific layout or functionality. Their use in whatever form is subject to prior approval by Eaton. The same applies to trademarks (especially Eaton, Moeller, and Cutler-Hammer). The Terms and Conditions of Eaton apply, as referenced on Eaton Internet pages and Eaton order confirmations.

Eaton is a registered trademark.

All other trademarks are property of their respective owners.

Follow us on social media to get the latest product and support information.

Powering Business Worldwide