MURR ELEKTRONIK
stay connected

MST 1-PHASE SAFETY TRANSFORMER

P: 500VA IN: 230/400VAC OUT: 24VAC

Single-phase safety transformer
500 VA
Isolation class T 40/B
Other voltages on request.

[Link to Product]

Illustration



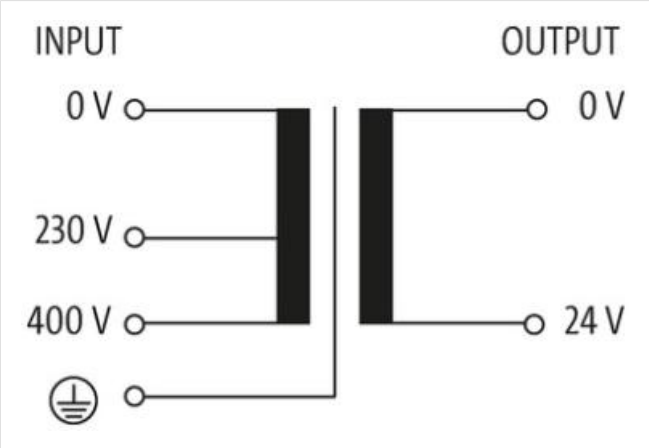

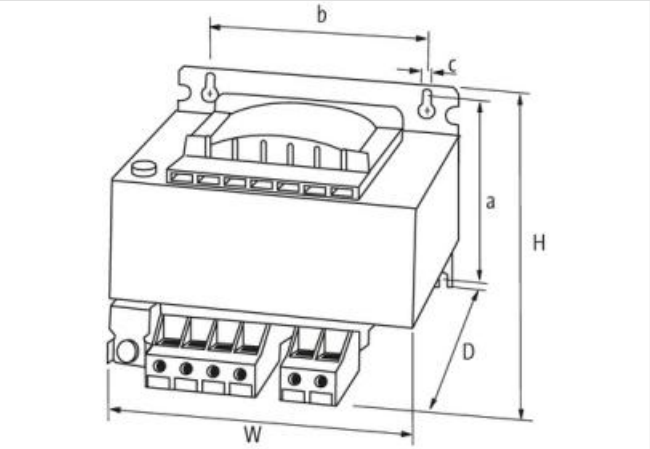

Product may differ from Image

General data

Standards	EN 61558-1, EN 61558-2-6, EN 62041 category 0
Mounting method	Key-hole mounting
Temperature range	-20...+40 °C (storage temperature -40...+80 °C)
Drill hole Ø	5.8×10 mm
Fixing centers a×b×c	87×104×5.8 mm
Dimensions H×W×D	108×135×133.6 mm

The information in this brochure has been compiled with the utmost care.
Liability for the correctness completeness and topicality of the information is restricted to gross negligence. Version: 2023-02-09

Output	
Output voltage	24 V AC (SELV)
Output rating	500 VA
Input	
Input voltage	230/400 V AC
Inrush current	81 A (230 V AC); 17.3 A (400 V AC)
Short-circuit current	40.4 A (230 V AC); 21.2 A (400 V AC)
Input current	2.4 A (230 V AC); 1.4 A (400 V AC)
Frequency	50...60 Hz
Product article number of manufacturer	86328

The information in this brochure has been compiled with the utmost care.
Liability for the correctness completeness and topicality of the information is restricted to gross negligence. Version: 2023-02-09