MURR ELEKTRONIK
stay connected

MTS 1-PHASE SAFETY TRANSFORMER

P: 100VA IN: 230/400VAC +/- 15VAC OUT: 24VAC

Single-phase safety transformer
100 VA
Isolation class T 40/B
Other voltages on request.

Link to Product

Illustration



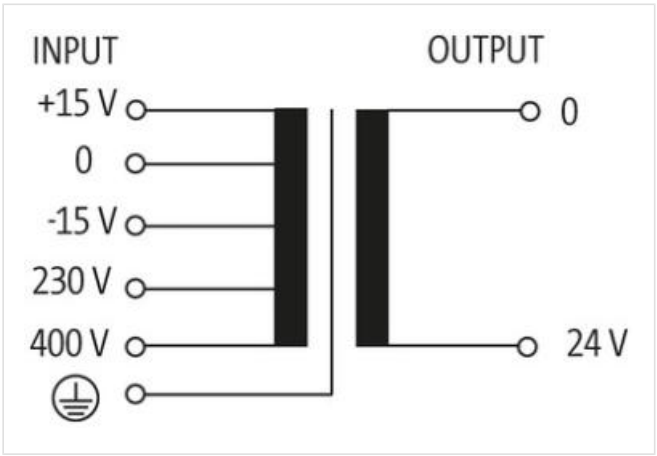

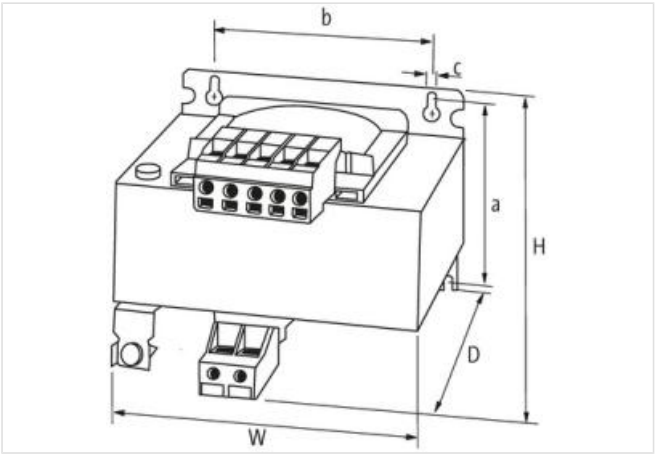

Product may differ from Image

General data

Standards	EN 61558-1, EN 61558-2-6, EN 62041 category 0
Mounting method	Long-hole mounting or DIN-rail mountable TH35 (EN 60715)
Temperature range	-20...+40 °C (storage temperature -40...+80 °C)
Test isolation voltage	4 kV (prim./sec.)
Drill hole Ø	4.8×8.4 mm
Fixing centers a×b×c	64.5×64×4.8 mm

The information in this brochure has been compiled with the utmost care.
Liability for the correctness completeness and topicality of the information is restricted to gross negligence. Version: 2023-02-09

Dimensions H×W×D	86×84×98 mm
Output	
Output voltage	24 V AC (SELV)
Output rating	100 VA
Input	
Input voltage	230/400 ±15 V AC
Inrush current	4.1 A (230 V AC); 2.3 A (400 V AC)
Short-circuit current	6.6 A (230 V AC); 3.8 A (400 V AC)
Input current	0.5 A (230 V AC); 0.3 A (400 V AC)
Frequency	50...60 Hz
Product article number of manufacturer	86362

The information in this brochure has been compiled with the utmost care.
Liability for the correctness completeness and topicality of the information is restricted to gross negligence. Version: 2023-02-09