zencontrol

Smart switch display **datasheet**

V 1.0
Last updated 16 / 02 / 21

Information is subject to change without notice, E&OE



Features

- 2 mA DALI line current
- Full colour touch screen
- Up to 5 units per DALI line
- Per page language settings
- Simple Cloud commissioning
- Multiple scenes and set-ups available
- Inbuilt wireless bridge for control of downstream DALI devices

Touch screen
1 to 4 buttons, 100+ icons, custom labels

Wireless interface
Mesh models do not require a local control interface

Motion sensor
Switch detects proximity when in standby mode

Glass front
Anodised aluminium and seamless glass for easy clean

© zencontrol

zencontrol

Smart switch display **datasheet**



Product range

Order code	Description
zc-ssd-blk	Smart switch with programmable touch display, black, to suit 84 mm wall mount

Features

- 1 to 4 buttons per page, up to 4 pages
- Multiple scenes and set-ups available
- 100+ icons and custom labels
- Simple Cloud commissioning
- Per page language settings
- Up to 5 units per DALI line
- Full-colour touch screen
- 2 mA DALI line current
- Inbuilt wireless bridge for control of downstream DALI devices

Dimensions

Fixing centres	84 mm	**Frame thickness**	11.7 mm
Dimensions	W75 / H116 / D37 mm	**Screen size**	52 x 87 mm

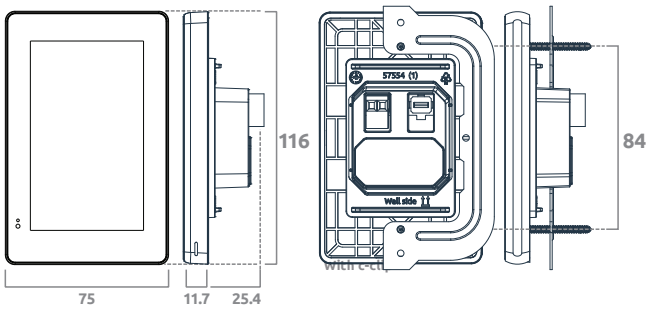

Specifications

Supply	240 V
Supply current	4 mA
Control system	DALI-2
DALI line current	2 mA
Wiring	1 - 4 mm² Strip 8 - 10 mm
Operating temperature	0 to 45°C
Material	Anodised aluminium, toughened glass
Ingress protection	IP20
Compliance standards	IEC 61347-2-11 CISPR 15 IEC 62386-301 EMC-2004/108/EC LVD-2006/95/EC

Notice

- The DALI line is not SELV. It must be treated like LV mains and treated with the same precautions and wiring regulations.
- zencontrol Application controllers support up to 80 pushbutton instances per line
- A zc-ssd-blk with every button enabled will consume 1ECD address with 16 pushbutton instances

V 1.0
Last updated 16 / 02 / 21

Information is subject to change without notice, E&OE

© zencontrol