zencontrol

LED pwm dimmer **datasheet**



Product range

Order code	Description
zc-iot-pwm-4ch-10a	LED pwm dimmer, field mount

Features

- For use with DALI control system
- Compatible with DALI and DALI-2
- Supports IEC 62386-104 over Thread®
- Protected against DALI over voltage
- Converts DALI ECGs and ECDs to a wireless system
- Compliant to IEC 62386-208 and IEC 62386-209 (TC, RGBW)
- Can be configured as 4 channel LED, 2x tuneable white or RGBW controller
- PWM switching frequency can be set to 400Hz, 1200Hz, 3600Hz

System overview: modes

1 **104 mode** is enabled after the device has been added to a 104 application controller such as zc-iot-fc.

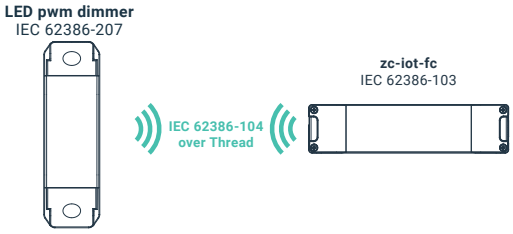

2 **104 + 101** Bridge mode is enabled after the device has been added to a 104 controller and a 101 power supply has been connected to the DALI terminals.

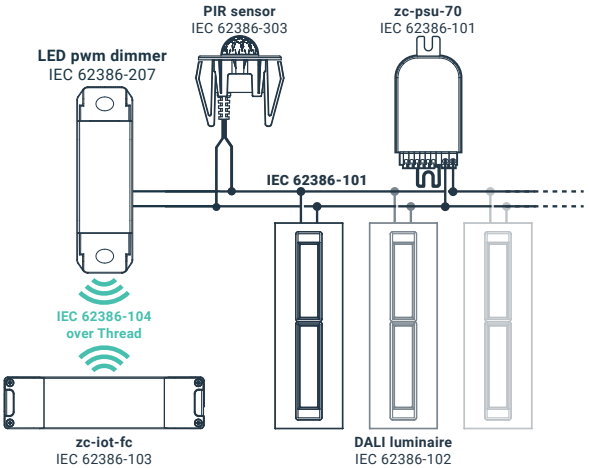

3 **101 mode** is enabled after a 101 power supply has been connected to the DALI terminal and the device **has not** been added to a 104 application controller.

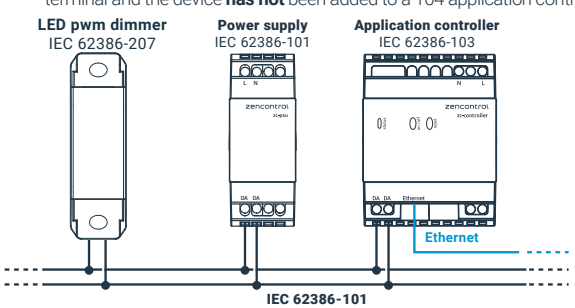

Specifications

Supply voltage	12 - 24 Vdc
Control system	**Wired** DALI-2 **Wireless** IEC62386-104 over Thread
Radio support	IEEE 802.15.4
Frequency band	2.4 GHz
Max radio tx power	+8 dBm
DALI line current	2 mA
Output load	10A total (0-10A per channel)
Output load type	LED only
Independent channels	4
Bus unit configurations	4 x DT6, 2 x DT8-TC, DT8-RGBW *(see bus unit configuration table)*
Wiring	1 - 4 mm^2 Strip 6 - 7 mm
Operating temperature	0 to 55°C
Material	PC
Ingress protection	IP20
Classification	III

Dimensions

Fixing centres	125 mm
Dimensions	W148 / H30 / D44.5 mm
Mounting options	Independant control gear / surface mount

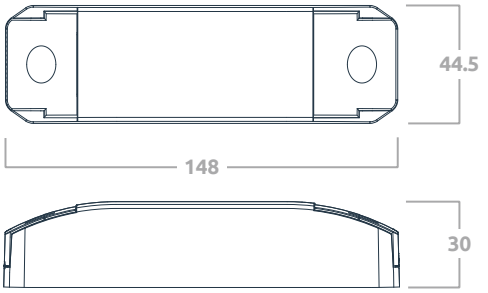

Wiring diagram

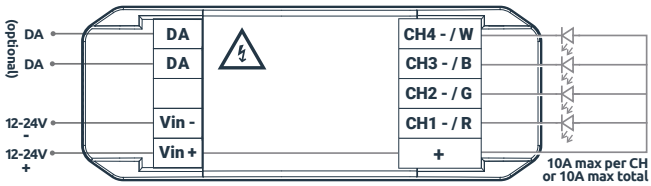

Bus unit configurations

Bus unit config.	No. of ECG	Channel 1	Channel 2	Channel 3	Channel 4
192 (default)	4	ECG index 0 DT6 (LED)	ECG index 1 DT6 (LED)	ECG index 2 DT6 (LED)	ECG index 3 DT6 (LED)
193	2	ECG index 0 DT8-TC (cool)	ECG index 0 DT8-TC (warm)	ECG index 1 DT8-TC (cool)	ECG index 1 DT8-TC (warm)
194	1	ECG index 0 DT8-RGBW (red)	ECG index 0 DT8-RGBW (green)	ECG index 0 DT8-RGBW (blue)	ECG index 0 DT8-RGBW (white)

Note: Bus unit configuration RGBW can be set using the zencontrol commissioning application. See support.zencontrol.com for more information.

V1.2
Last updated 12 / 10 / 23
Information is subject to change without notice, E&OE

© zencontrol